L-65A/4 SC	LH-65A/4 SC			

DN 65	600 - 1500 r/min	Ø 148 mm	1~ 230 V

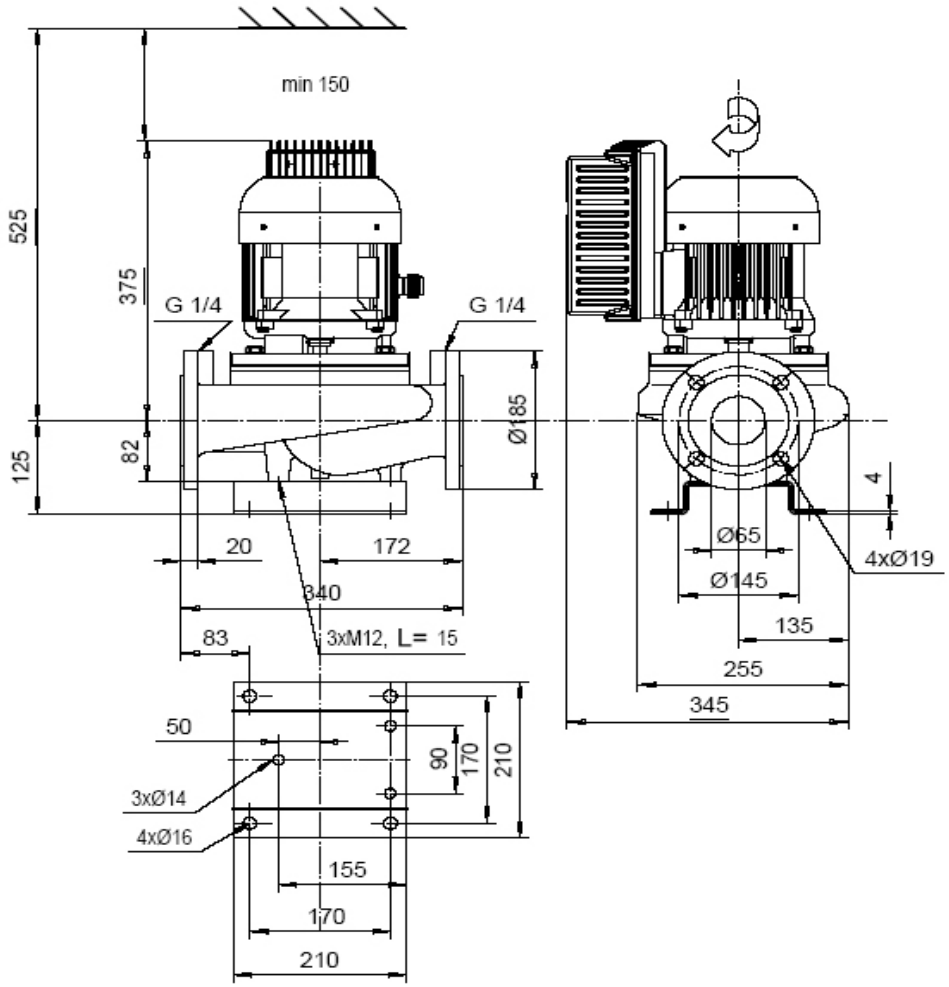

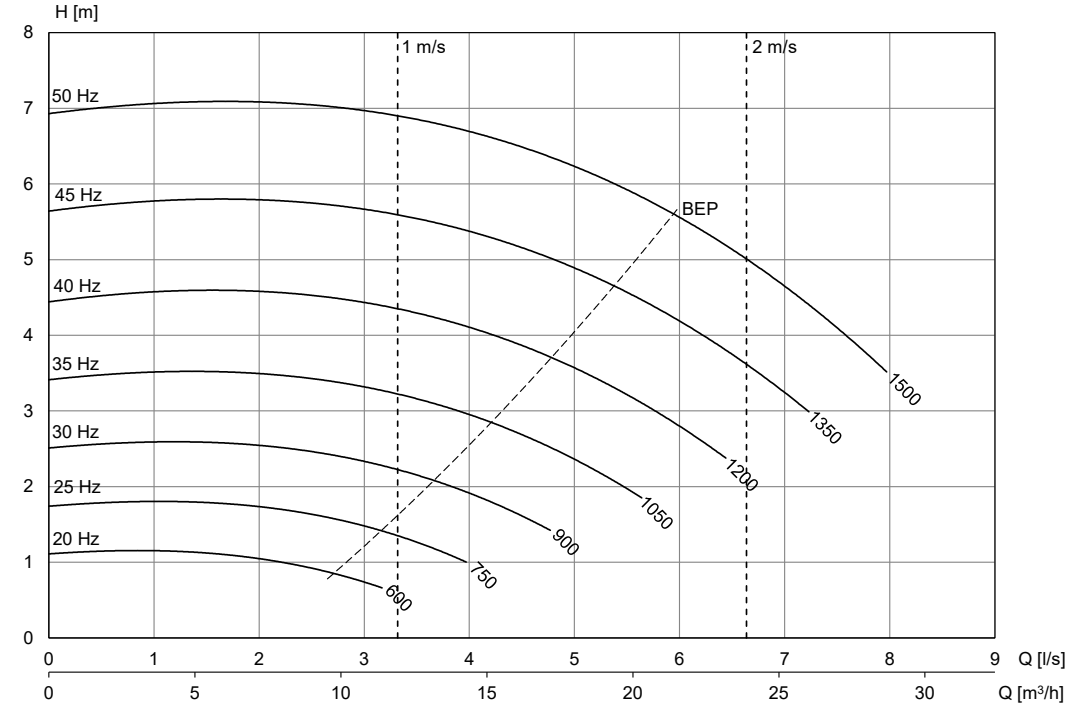

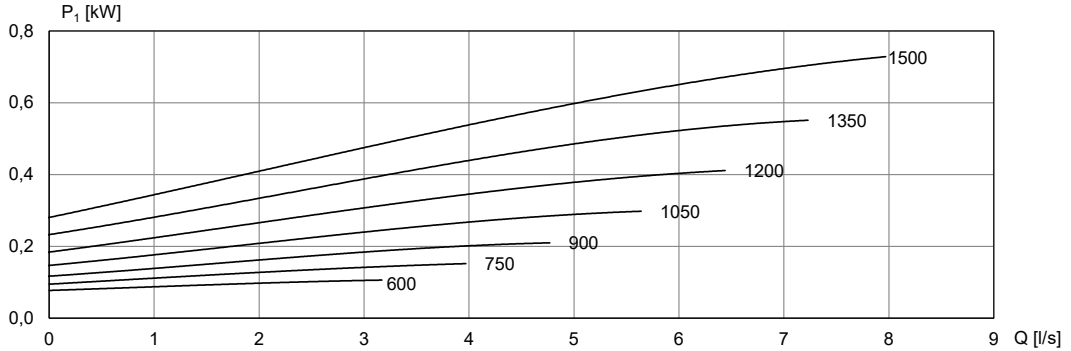

Motor	P_{2N} [kW]	I_N [A]	[kg]
KHSC-100 A2 F19	0,55	4,6	47