PUMP CATALOGUE

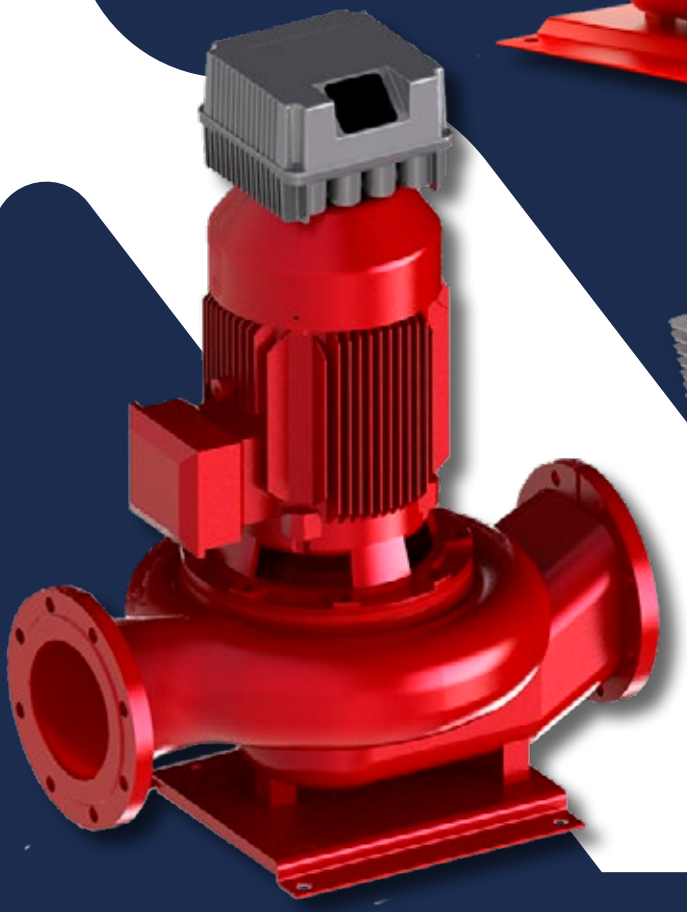

SC-, VS- AND NC-PUMPS
WITH INTEGRATED FREQUENCY CONVERTER

Kolmeks is a Finnish manufacturing company and part of the family-owned Brandt Group Oy Ltd. The group has factories in Finland, Estonia, China and India, providing customers with expertise in two business areas: pumps and components (production and supply chain solutions). Kolmeks Pumps specializes in state-of-the-art pumps, HVAC products and dedicated maintenance services.

The pump specialist

We have been engineering pumps for over 75 years and striving to develop a portfolio of state-of-the-art pumping equipment. Pump technology and application know-how are our core competencies. We provide our with customers high-quality pumping and HVAC solutions as well as versatile maintenance services.

The main industries we work with include building services, industrial, marine and mobility operators. Kolmeks pumps are typically used in the pulp, paper and chemical industries as well as in other process industries.

Now and in the future, the human infrastructure depends on pumps that improve the quality of lives through sustainable means.

Planet, people and continuity are the cornerstones of our sustainability strategy.

The pumps and their motors are designed and manufactured with the highest craftsmanship and they meet the demands of the European EcoDesign directive. Kolmeks was also among the first Finnish companies to receive the ISO 9001 Quality certificate and the ISO 14001 Environmental certificate.

We strive to be a solutions provider helping our customers to succeed by offering the most efficient, reliable and sustainable products and services.

Pump ranges

Kolmeks has three ranges of pumps with integrated frequency control; the SC-, VS- and NC -ranges. The smallest pump with integrated frequency control is 0,08 kW, the largest 45 kW. In addition, all of the pumps are suited for control by external frequency control.

Kolmeks pumps are available in four different materials; grey cast iron, nodular cast iron, bronze and stainless steel casting. The pumps are also available with several different shaft sealing solutions – which makes them suitable for numerous pumping applications.

Global reach, local presence

We have been operating in the Finnish pump market since 1945. Today, a large part of the pumps we manufacture are delivered, to all major European countries, Russia and China. Increasingly, Kolmeks products are also exported to several countries in the Middle East, Asia and Africa.

Turenki and Chuzhou are key sites for Kolmeks's own pumps manufacturing and motor assembly.

Ask us more about our products and services! We will be more than happy to provide you with solutions.

www.kolmeks.com

DOMESTIC HOT WATER PUMPS AND SEAWATER PUMPS, INLINE

CIRCULATING PUMPS TO THE HEATING AND COOLING SYSTEMS, INLINE

CIRCULATING PUMPS TO THE POWER PLANTS AND PRIMARY SIDE OF DISTRICT HEATING SYSTEMS, INLINE

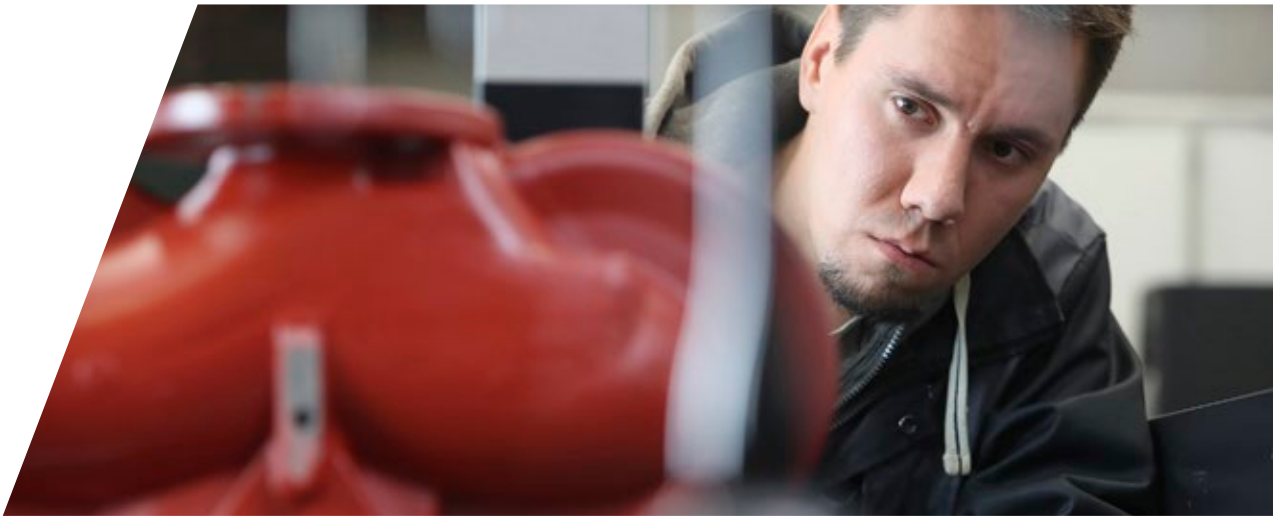

TECHNICAL INFORMATION

DOMESTIC HOT WATER PUMPS AND SEAWATER PUMPS, INLINE

INLINE PUMPS WITH INTEGRATED SC FREQUENCY CONVERTER, 1x230V

INLINE PUMPS WITH INTEGRATED VS FREQUENCY CONVERTER, 3x400V

Kolmeks

www.kolmeks.com

General technical data

AEP, LP and ALP pumps are bronze domestic hot water pumps equipped with an integrated frequency converter according to the SCA (1x230V) - and VSA (3x400V) -version.

Other versions are also available if needed, see Frequency converter pumps SC series in this product catalogue.

- **AEP pumps are equipped with threads G1 – G1 1/4**
- **LP and ALP pumps are equipped flanges DN50 ... DN100**

Applications

These bronze pumps are mainly used for the circulation of domestic hot water and seawater. They can also be used in standard circulation systems, as pressure boosters and as transfer pumps for various clean oxygen-rich liquids.

Quick selection chart SC-pumps

Supply voltage **1x230V**

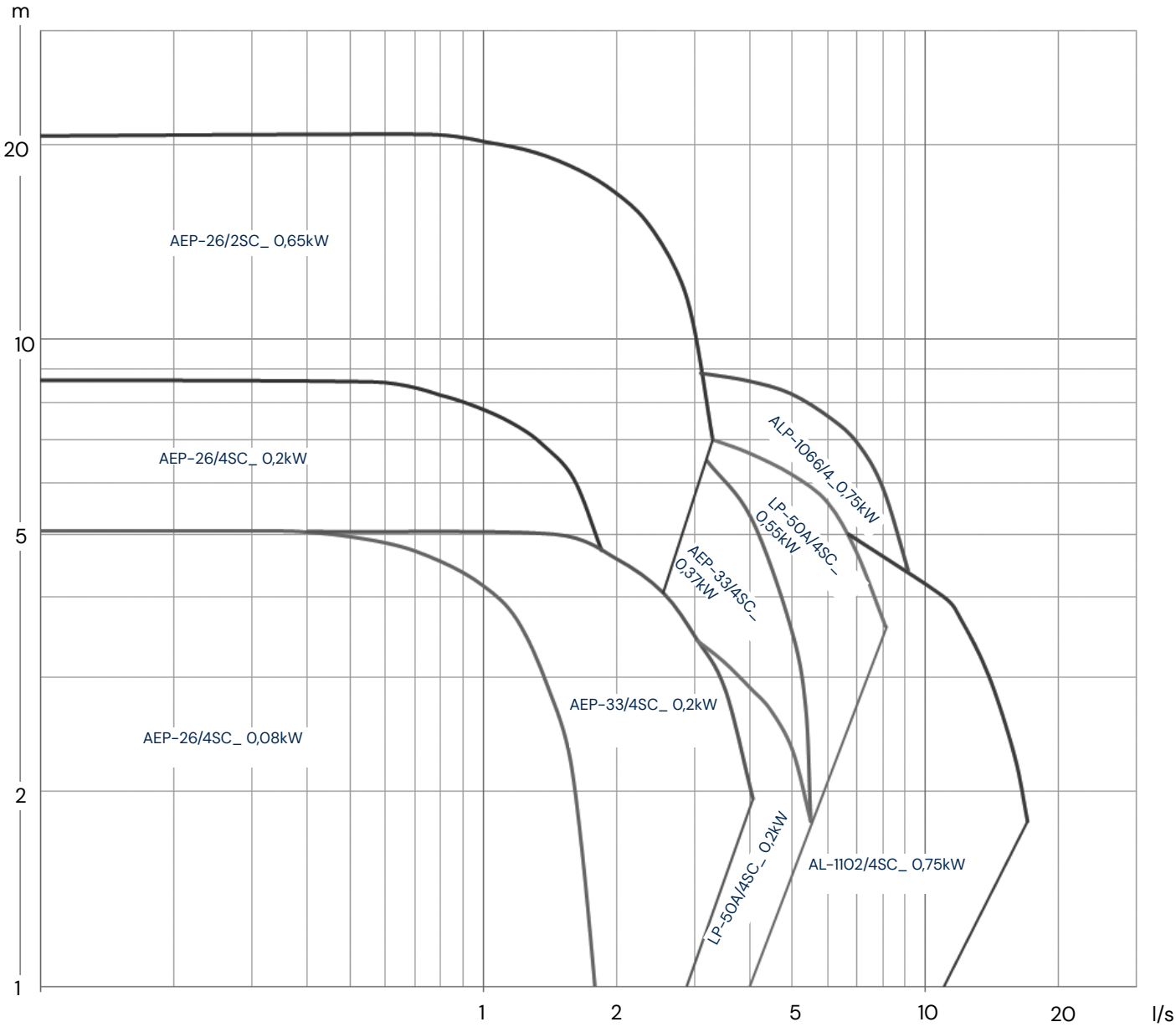

Quick selection chart VS-pumps

Supply voltage 3x400V.

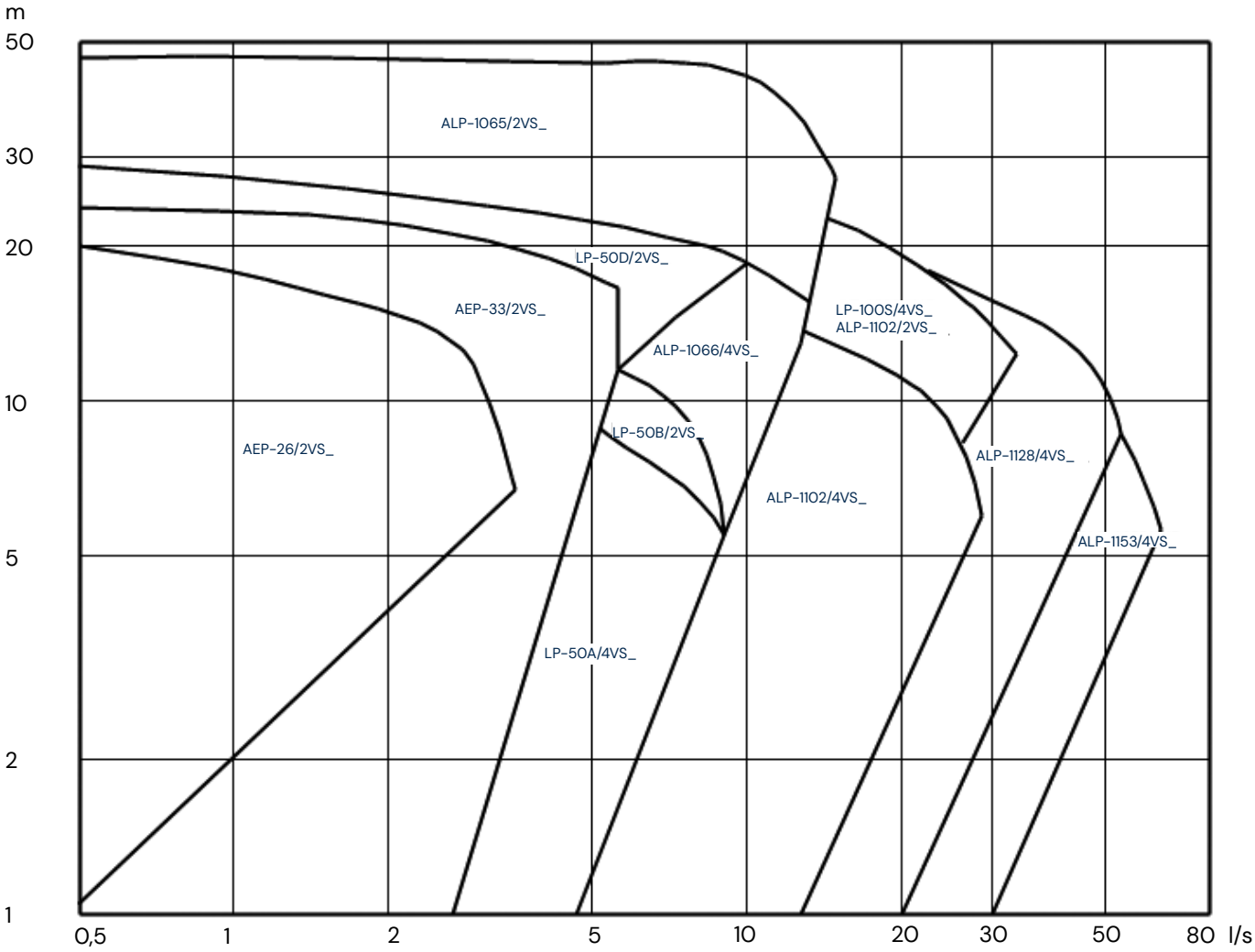

Structure

Pump

SC_- and VS domestic hot water pumps are monoblock centrifugal pumps equipped with a dry motor, which fulfill the requirements of EcoDesign –directive. The impeller is installed directly onto the shaft of the electric motor (no separate couplings). A frequency converter is integrated into the pump motor.

Electric motor

The electric motor is a three-phase Kolmeks asynchronous motor designed specifically for pump use and frequency converter operation, which guarantees high starting torque and low energy consumption and fulfills the requirements of EcoDesign –directive. The electric motor is highly efficient and has low noise levels.

Supply voltage:	SC: 1 x 230 V, 50 Hz VS: 3 x 400V, 50Hz
Enclosure class:	IP 54
Insulating class:	F
Duty type:	Continuous duty (S1)
Ambient temperature:	0 ... +40°C

Connection types

Threaded:

The SC_ and VS_ pumps threads are dimensioned according to Standard ISO 228/1.

Flanged:

The flanges of an SC_ and VS_ pumps fits counter-flanges dimensioned according to ISO 7005.

Seals:

The standard shaft seal of an SC_ and VS_-series pumps is a single mechanical seal. The pump housing seal

AEP-, LP- and ALP- domestic hot water pumps with SCA and VSA frequency converters

Standard materials

Connection G or DN	Bronze CuSn10Zn2, PN10	Shaft seal, PN10 Ø [mm], materials	Housing size [mm]	O-ring Material	Motor [kW]
G1	AEP-26/4 SCA	12, carbon/SiC Viton	123 X 2,5	NBR	0,08 and 0,2
	AEP-26/2 SCA	12, carbon/SiC Viton	123 X 2,5	NBR	0,65
G1 1/4	AEP-33/4 SCA	12, carbon/SiC Viton	145 X 2,5	NBR	0,2 and 0,37
DN50	LP-50A/4 SCA	12, carbon/SiC EPDM	150 X 3	NBR	0,2 and 0,55
DN65	ALP-1066/4 SCA	18, carbon/SiC EPDM	179,3 X 5,7	EPDM	0,55 and 0,75
DN100	ALP-1102/4 SCA	18, carbon/ SiC EPDM	179,3 X 5,7	EPDM	0,75

Connection G or DN	Bronze CuSn10Zn2, PN10	Shaft seal, PN10 Ø [mm], materials	Housing size [mm]	O-ring Material	Motor [kW]
G1	AEP-26/2 VSA	12, carbon/SiC Viton	123 X 2,5	NBR	0,65
G1 1/4	AEP-33/2 VSA	12, carbon/SiC Viton	145 X 2,5	NBR	1,1 and 1,5
DN50	LP-50A/4 VSA	12, carbon/SiC EPDM	150 X 3	NBR	0,55 and 0,9
	LP-50B/2 VSA	12, carbon/SiC EPDM	150 X 3	NBR	1,1
	LP-50D/2 VSA	18, carbon/SiC EPDM	150 X 3	NBR	2,2 and 3
DN65	ALP-1066/4 VSA	18, carbon/SiC EPDM	179,3 X 5,7	EPDM	0,55, 0,9, 1,5, 2,2 and 3
	ALP-1065/2 VSA	18, carbon/SiC EPDM	179,3 X 5,7	EPDM	3, 4, 5,5 and 7,5
DN100	ALP-1102/4 VSA	18, carbon/ SiC EPDM	179,3 X 5,7	EPDM	0,75, 1,5, 2,2 and 3
	ALP-1102/2 VSA	18, carbon/ SiC EPDM	179,3 X 5,7	EPDM	4, 5,5 and 7,5
	LP-100S/4 VSA	32, carbon/ SiC EPDM	315 X 6,3	EPDM	4, 5,5 and 7,5
DN125	ALP-1128/4 VSA	32, carbon/ SiC EPDM	309/295X1	gasket	4, 5,5 and 7,5
DN150	ALP-1153/4 VSA	32, carbon/ SiC EPDM	309/295X1	gasket	7,5

Kolmeks recommendation for pumps in district heating circulation systems

SCA- and VSA-version bronze domestic hot water pump equipped with an integrated frequency converter.

SC –series supply voltage 1 x 230 V

VS –series supply voltage 3 x 400 V

Advantages of SC- and VS -pump

- Alarms to BMS
- Duty point can be adjusted in one step
- Automatically adapts to system heat/cooling requirements (radiator and air heating circulation)
- Energy savings
- Reliable operation
- Reduced wear in pipework and system valves leading to proponged life
- Smoother system operation
- Replacement motor unit service

District heating system with two secondary circuits

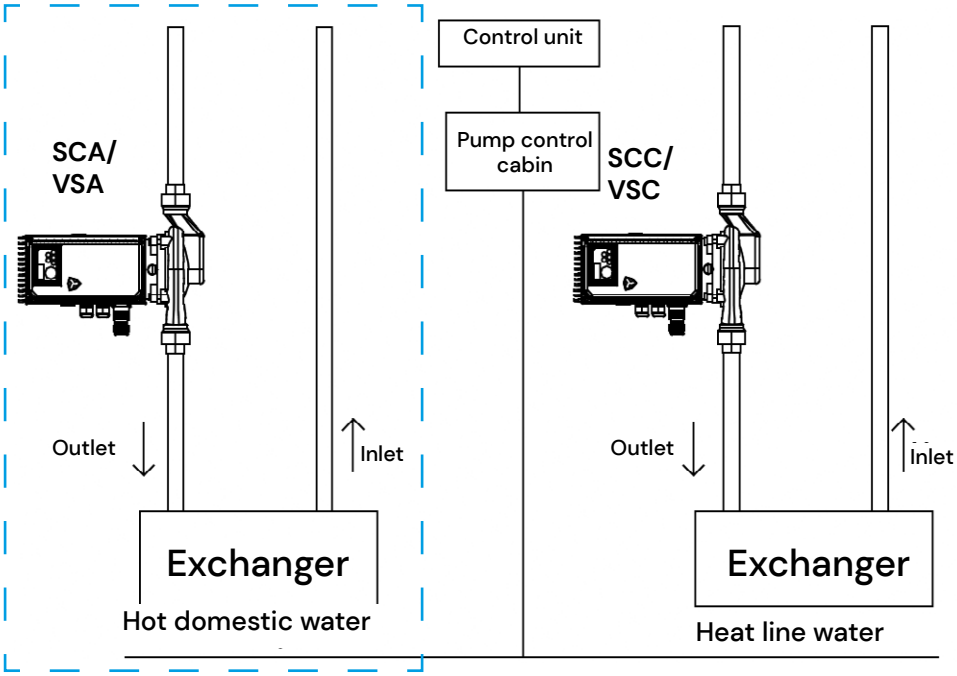

Domestic hot water

District heating system with three secondary circuits

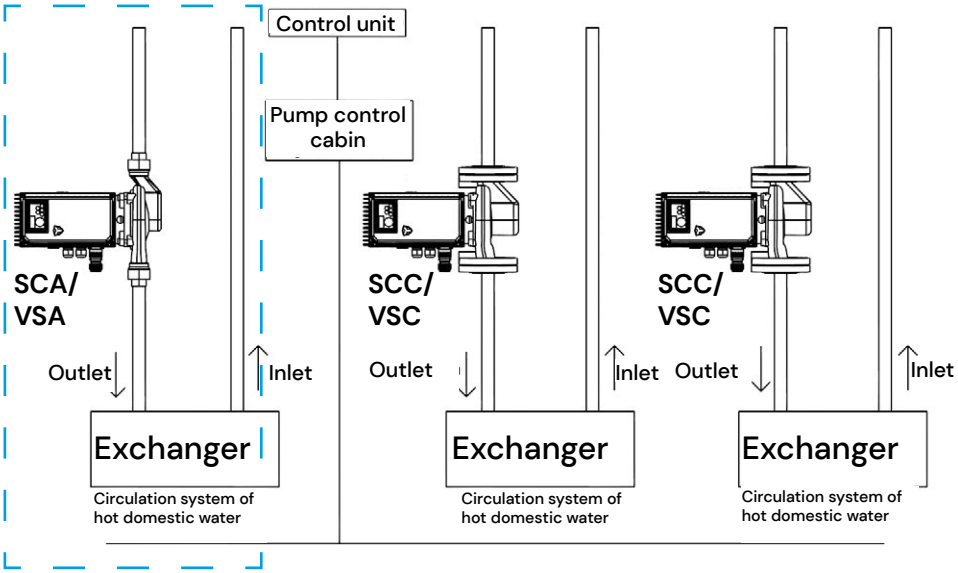

Rating plate information

Rating plate

Accessories:
T = External mechanical seal for aggressive liquids
H = Flushing
KT = Double mechanical seal
Sn = Non-standard mechanical seal
Kn = Non-standard surface treatment

Special impeller material:
PM = Bronze
SS = Stainless steel AISI316

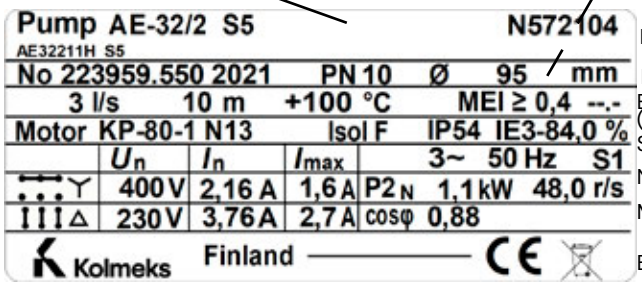

Pump type
Serial number, Pressure class
Duty point, Max liquid temperature
Motor type
Nominal voltage and current
Insulating and enclosure class
Manufacturer, Country of origin

Motor code marking
Impeller size
Electrical power at duty point (if required)
Supply voltage, phase number
Nominal shaft power and rotation speed
Minimum efficiency index (MEI)
Bearing types, CE marking

1	2		3		4	5
AL		-	110	2 /	4	VS C
L	P	-	50	A /	4	SC A

1) Pump series:
AE-, L-, AL-

2) Housing, sealing flange and impeller material:
no letter = Grey cast iron EN-GJL-200
H = Nodular cast iron EN-GJS-400
P = Bronze CuSn10Zn2
S = Stainless steel AISI 316

3) Connection sizes:
26 = 1"
33 = 1 1/4"
32 = DN 32
40 = DN 40
50 = DN 50
65 = DN 65
106 = DN 65
80 = DN 80
110 = DN 100

4) Electric motor pole number:
2 = rotation speed 50 r/s (50 Hz)
4 = rotation speed 25 r/s (50 Hz)
rotation speed 30 r/s (60 Hz)
rotation speed 32.5 r/s (65 Hz)

5) SC = SC frequency converter integrated in pump.
VS = VS frequency converter integrated in pump:
Pump adjustment method SCA, SCB, SCC, SCD, SCF, SCG, SCM / VSA, VSB, VSC, VSD, VSF, VSG, VSM

Installation

The pump can be installed directly in the pipework without additional support. The pumps with flanges include the base plate.

The position of the motor unit and therefore the location of the frequency converter box can be changed by detaching the motor unit from the pump housing and rotating it to the required position, with certain limitations.

Ensure the following when installing the pump

- Enough room for control, service and inspections
- The installation position should be chosen such that the display is readable; a separate control panel can also be used if required.
- Possibility to use lifting and transfer devices if needed
- Shut-off valves on both sides of the pump
- Pump must be installed in such a position that the integrated frequency converter is not in the immediate vicinity of a hot pipes and is fully accessable.

Operating positions

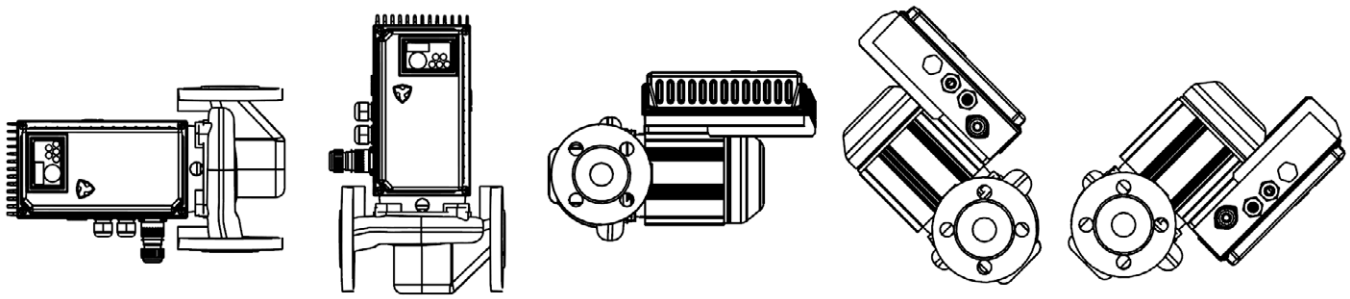

Prohibited operating positions

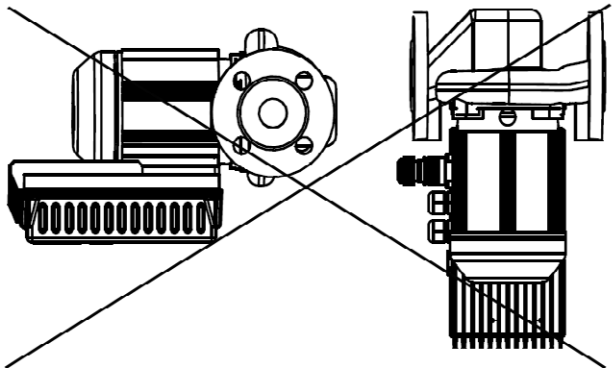

Recommended general limits without the base plate

Size	Power
DN 15 ... 50	max. 2,2 kW
DN 65	4 kW
DN 80	4 kW
DN 100	7,5 kW
DN 125	7,5 kW

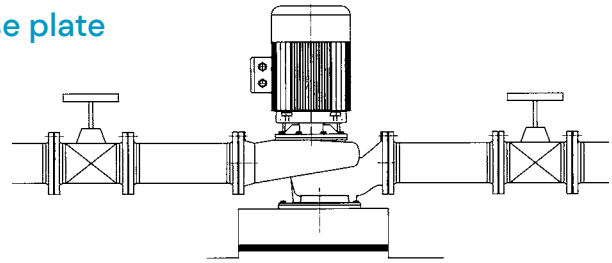

Large pumps are fastened by their base plate onto a freely moving concrete plinth, which is to be separated from the floor by a 20-mm thick rubber or cork mat. The weight of the concrete base must be about 1.5 times the weight og the pump.

SCA / VSA pump: Direct speed reference using a potentiometer

Applications
For systems with no continuous automatic adjustment requirement and a constant duty point, such as domestic hot water circulation systems, for example.

Accessories
Pump and frequency converter.

Operating principle
The rotation speed of the pump is set in one step during commissioning using the buttons on the frequency converter.

Pump curve
The pump QH curve equals the QH curve of a standard speed pump.

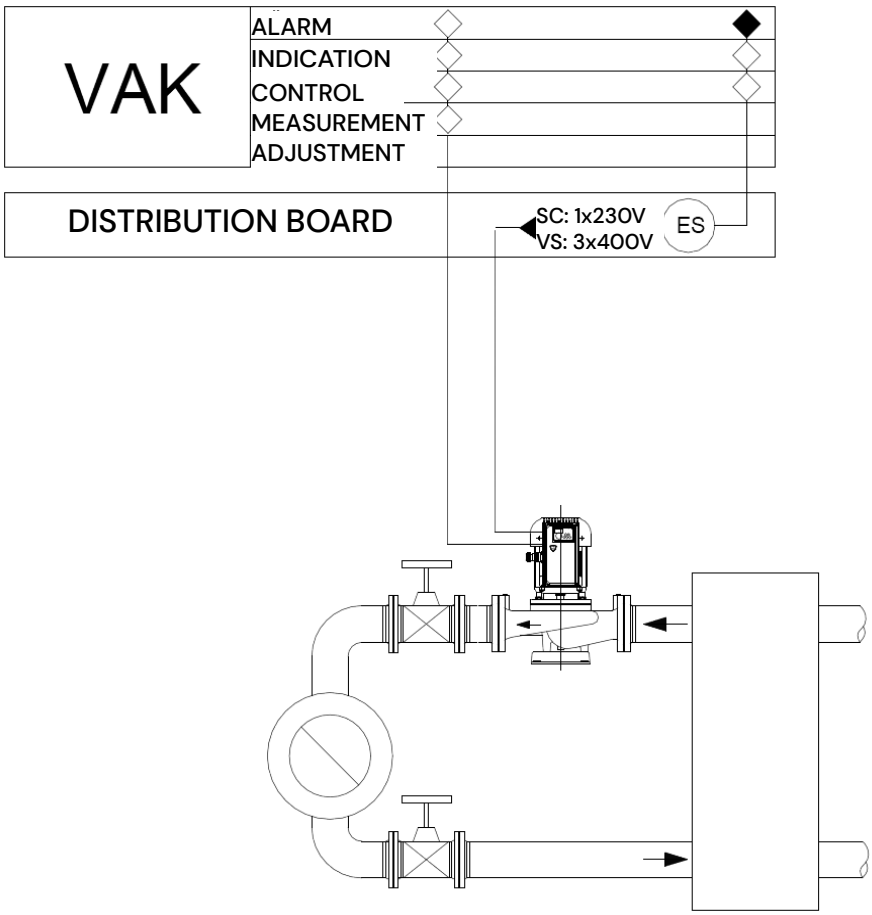

Drive unit

Exchange unit (SCA, VSA)
The pump motor unit without the transmitter includes an electric motor, a frequency converter, a sealing flange, an impeller, and seals. When replacing the exchange unit, no procedures need to be carried out on the piping or electricity, because there is no need to detach the pump housing and the power supply is connected using a quick connection plug.

SCA –pumps are equipped with quick connecting plug in mains supply.
In VS –pumps the mains supply is fixed.

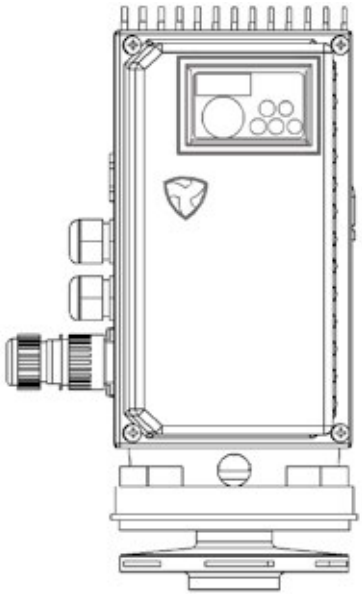

Reading curves

Characteristic curves apply to +20°C water.

NOTE! Liquid density and viscosity affect the amount of power required. Please check that the motor power is sufficient for liquids with a higher density and viscosity than water. Please contact Kolmeks for further information.

Thread or flange size | Pump type | Rotation speed range | Impeller size | Supply voltage

L-50A/4 SC | LP-50A/4 SC

DN 50 | 600 - 1800 r/min | Ø 135 mm | 1~ 230 V

Flow rate in pump flanges

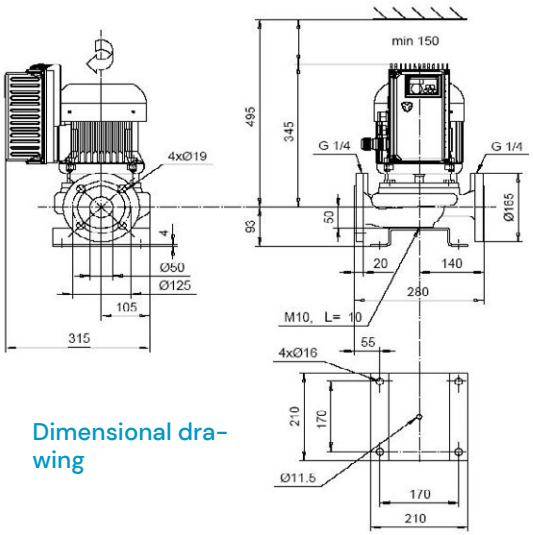

Dimensional drawing

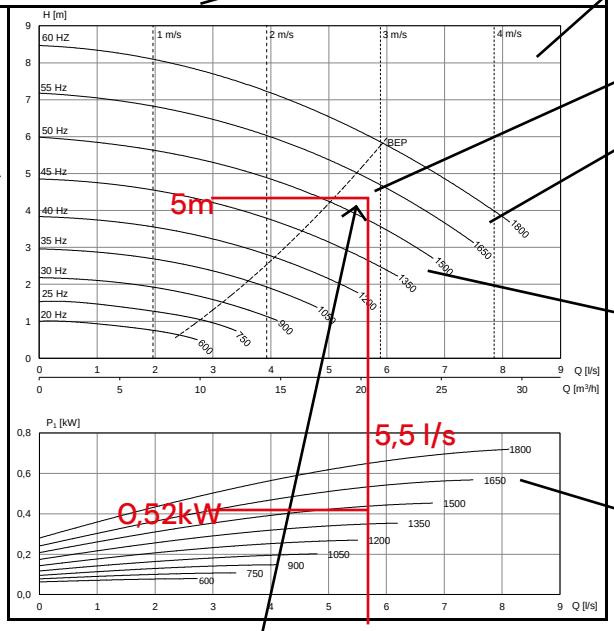

Best efficiency point BEP

QH curve at max. output frequency (60 Hz)

QH curve for different frequencies. Minimum frequency drawn in curves 20 Hz. As factory setting, SC pumps have minimum frequency of 10 Hz.

Electric power on different rotation speed ranges.

Motor	P_{2N} [kW]	I_N [A] (1x230V)	[kg]
KHSC-100 A2 F15	0,55	4,6	42

Electric motor type | Pump nominal shaft power | Nominal single phase current | Pump weight

Intersection at best efficiency point (BEP)

An example of selecting a pump:
Duty point 5.5 l/s, 50kPa (5m)

1. Find a pump size with a BEP (best efficiency point) which is as close as possible to the required duty point.
2. Ensure that the output 5.5 l/s and head 5m intersect at the best efficiency point.
3. The best energy efficiency and lowest energy consumption are obtained by following the above steps.
4. If needed, it is possible to read the input power of the device on the P1 curve. In this case, the input power is 0.52 kW at the desired duty point.

DATA SHEETS

INLINE PUMPS WITH INTEGRATED SC FREQUENCY CONVERTER

1x230V

AEP-series, threaded G1-G1¼

LP- and ALP-series, flanged DN50-DN100

AEP-26/4 SC

G 1	600 - 1500 r/min	Ø 125 mm	1~ 230 V

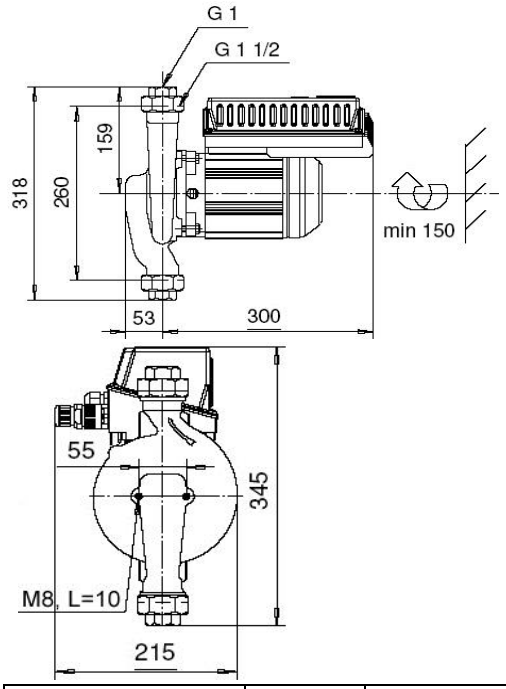

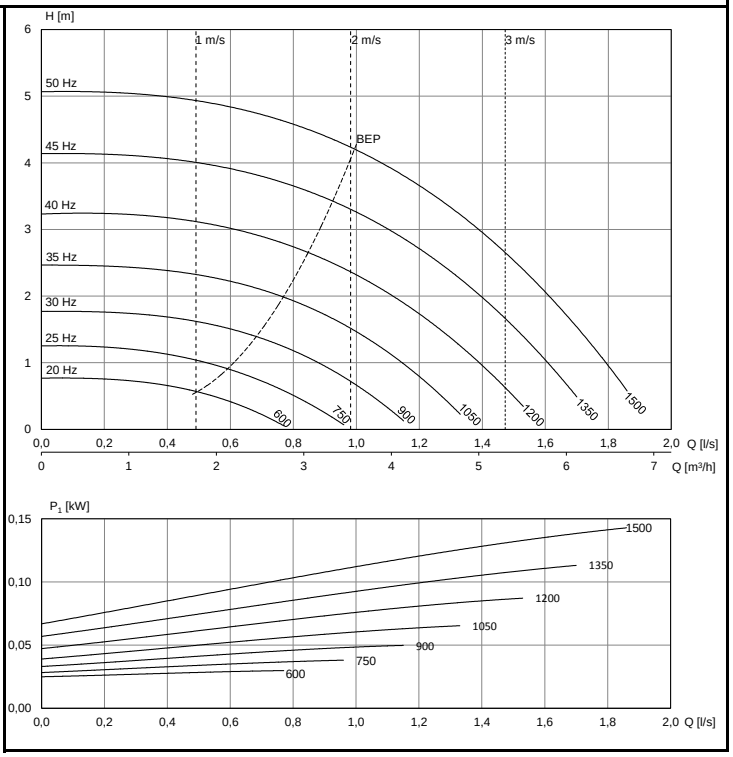

Motor	P_{2N} [kW]	I_N [A] (1x230V)	[kg]
OPSC-742 N12	0,08	1,1	14

AEP-26/4 SC

G 1	600 - 1950 r/min	Ø 125 mm	1~ 230 V

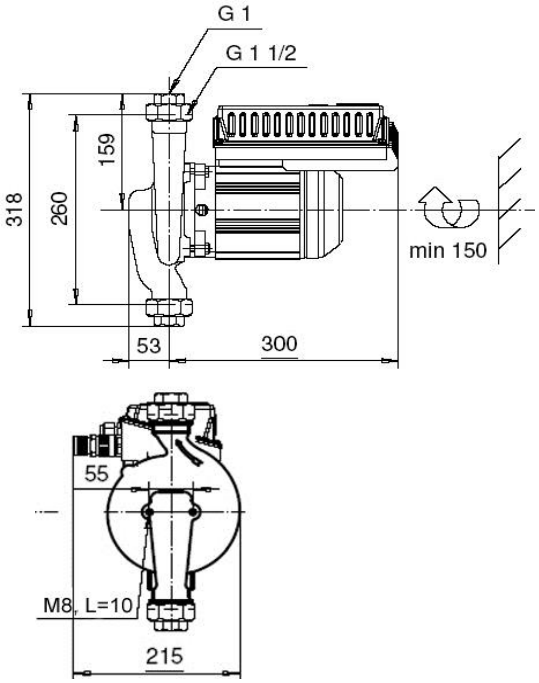

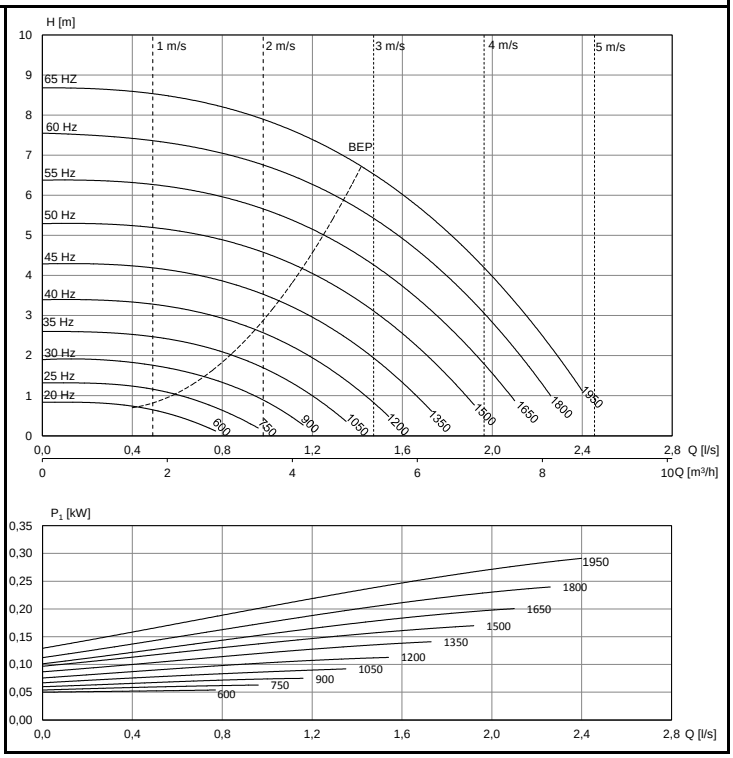

Motor	P_{2N} [kW]	I_N [A] (1x230V)	[kg]
OPSC-752 N12	0,2	2,1	15

AEP-26/2 SC

G 1	1200 - 3000 r/min	Ø 125 mm	1~ 230 V

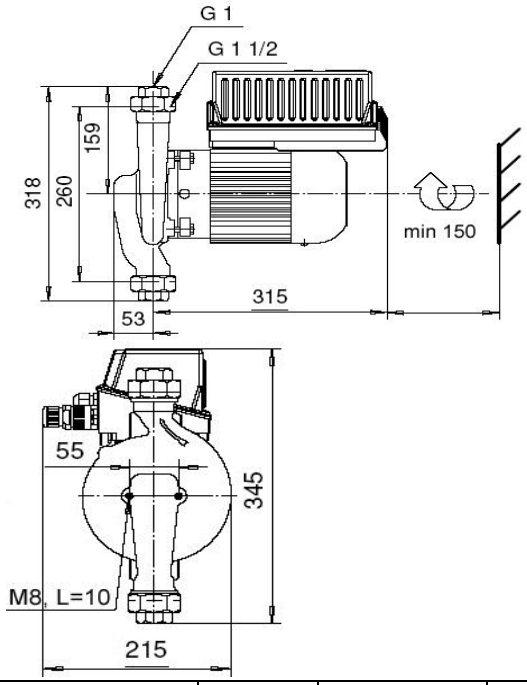

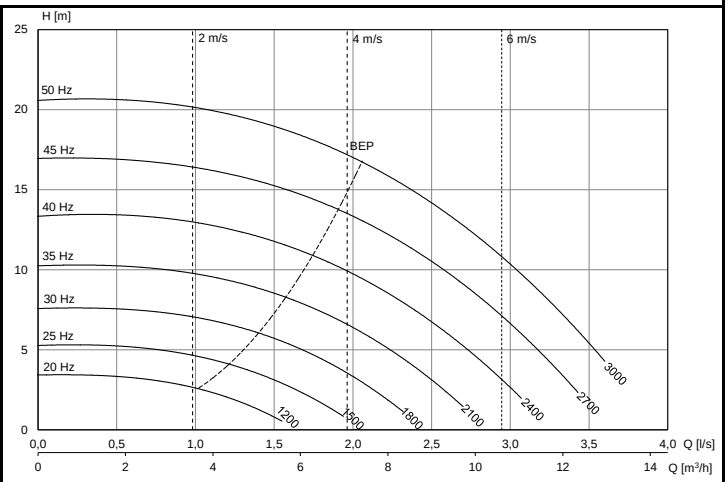

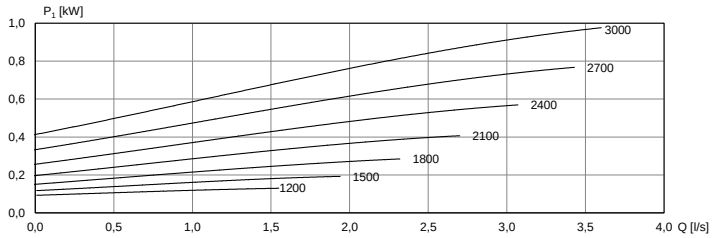

Motor	P_{2N} [kW]	I_N [A] (1x230V)	[kg]
KHSC-841 N12	0,65	6,0	19

AEP-33/4 SC

G 1 1/4	600 - 1500 r/min	Ø 130 mm	1~ 230 V

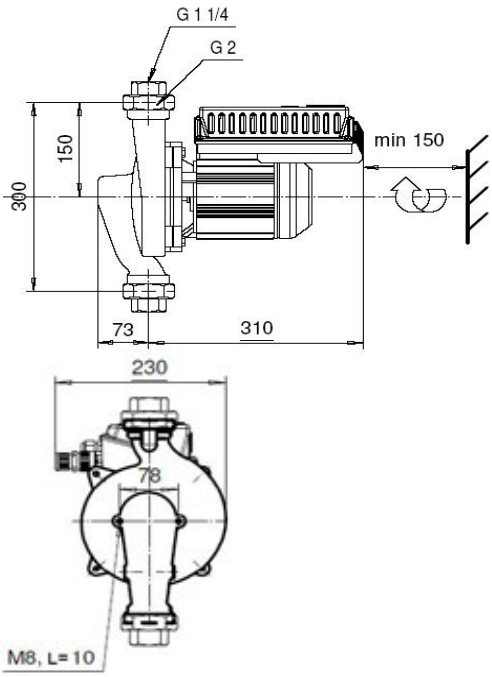

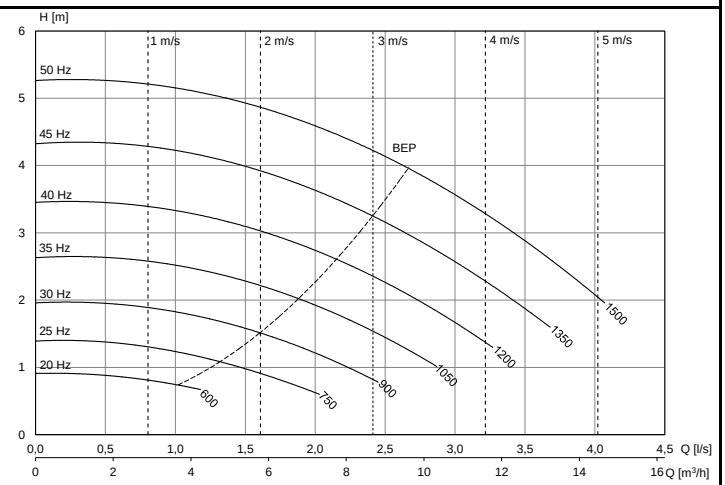

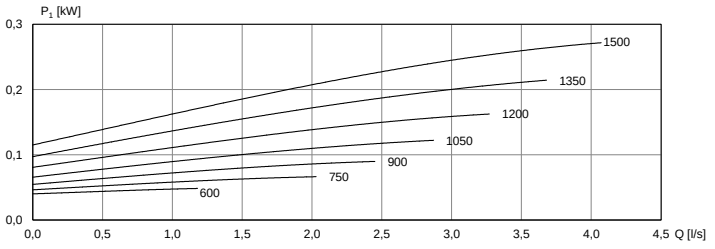

Motor	P_{2N} [kW]	I_N [A] (1x230V)	[kg]
OPSC-752 N13	0,2	2,1	20

AEP-33/4 SC

G 1 1/4	600 - 1800 r/min	Ø 135 mm	1~ 230 V

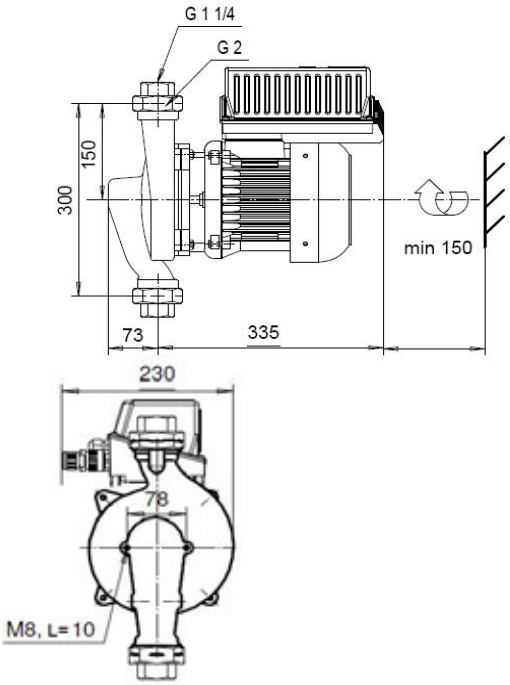

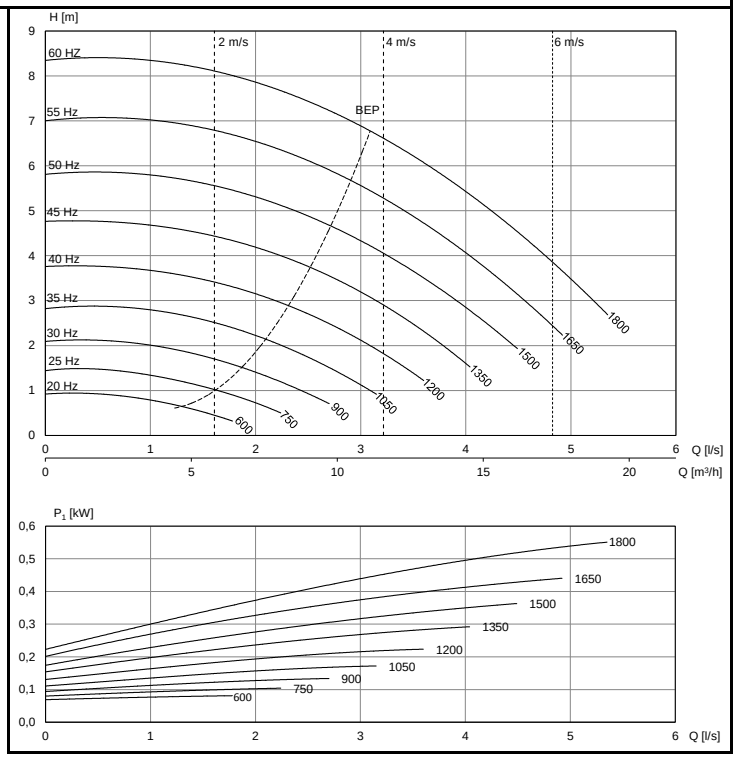

Motor	P_{2N} [kW]	I_N [A] (1x230V)	[kg]
KHSC-100 A2 N13	0,37	3,6	35

LP-50A/4 SC

DN 50	600 - 1500 r/min	Ø 120 mm	1~ 230 V

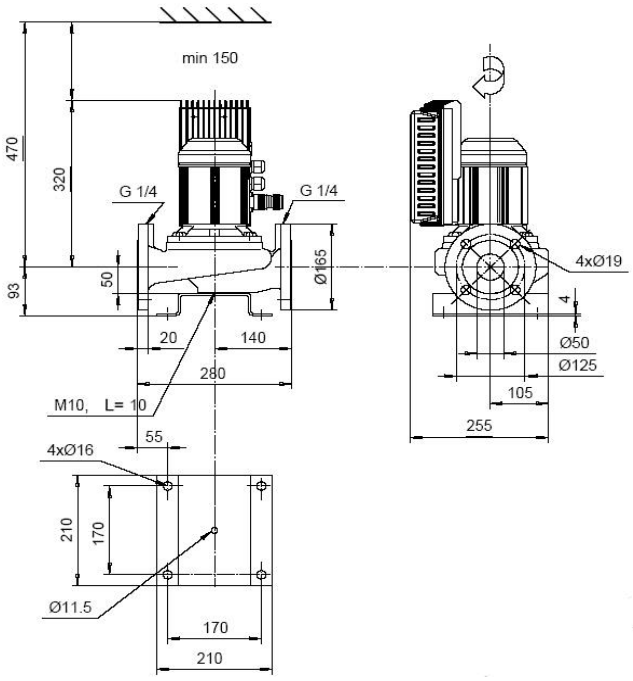

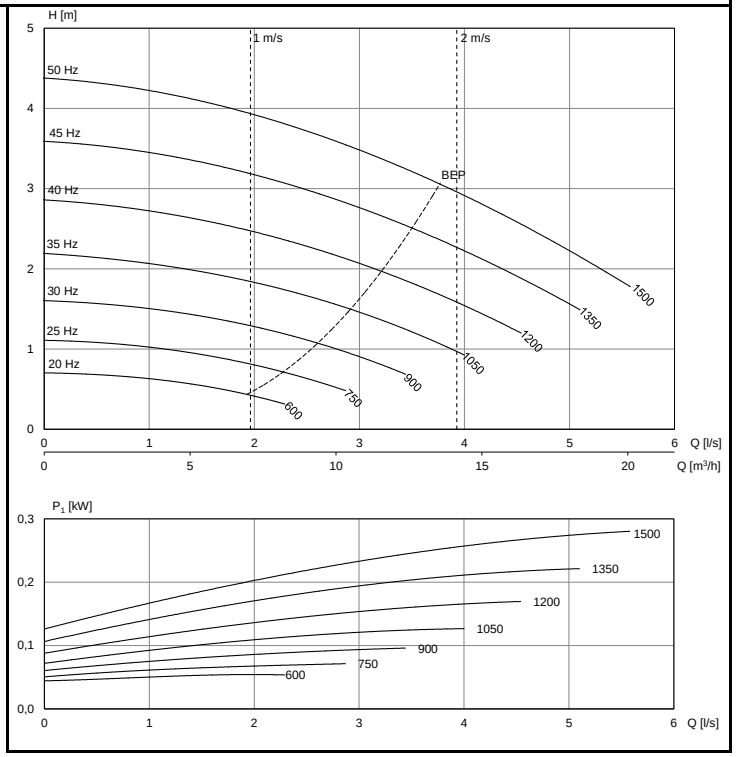

Motor	P_{2N} [kW]	I_N [A] (1x230V)	[kg]
OPSC-752 F15	0,2	2,1	26

LP-50A/4 SC

DN 50	600 - 1800 r/min	Ø 135 mm	1~ 230 V

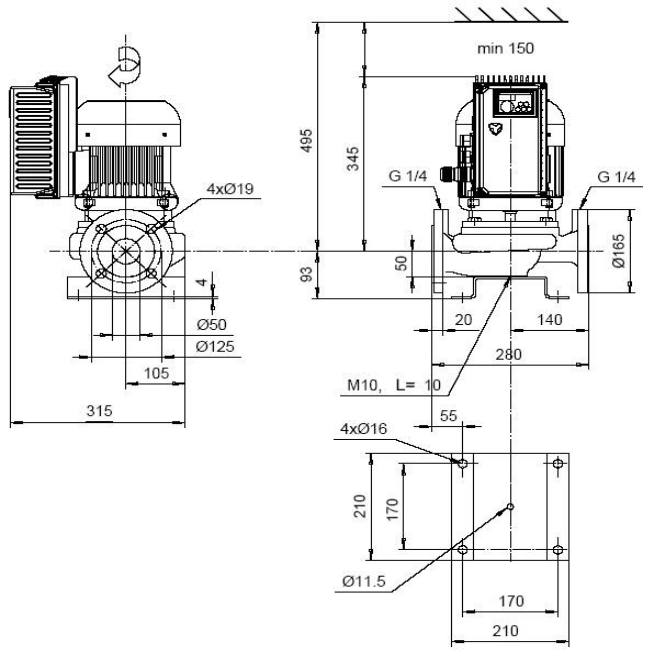

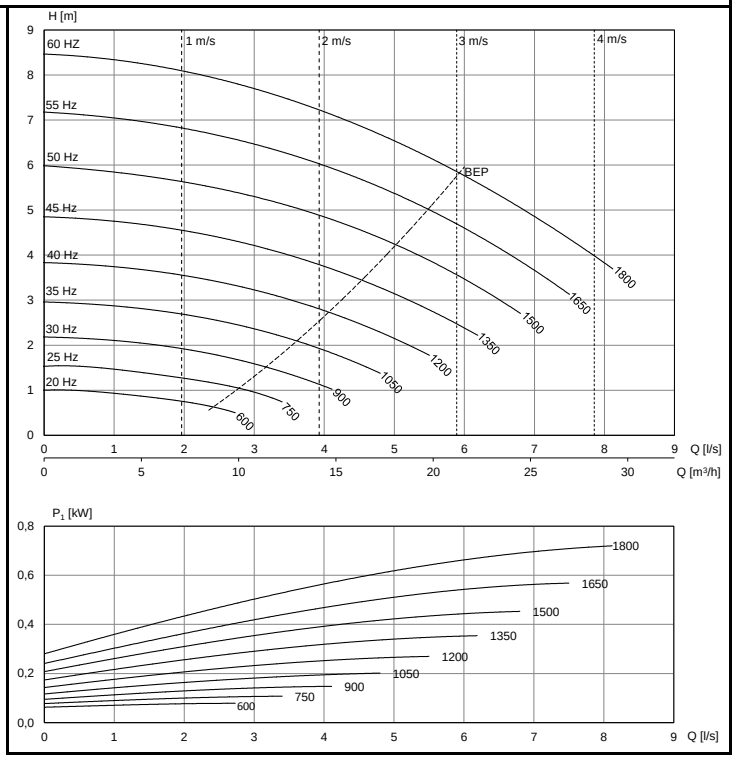

Motor	P_{2N} [kW]	I_N [A] (1x230V)	[kg]
KHSC-100 A2 F15	0,55	4,6	42

ALP-1066/4 SC

DN65	600 - 1500 r/min	Ø145	1~ 230 V

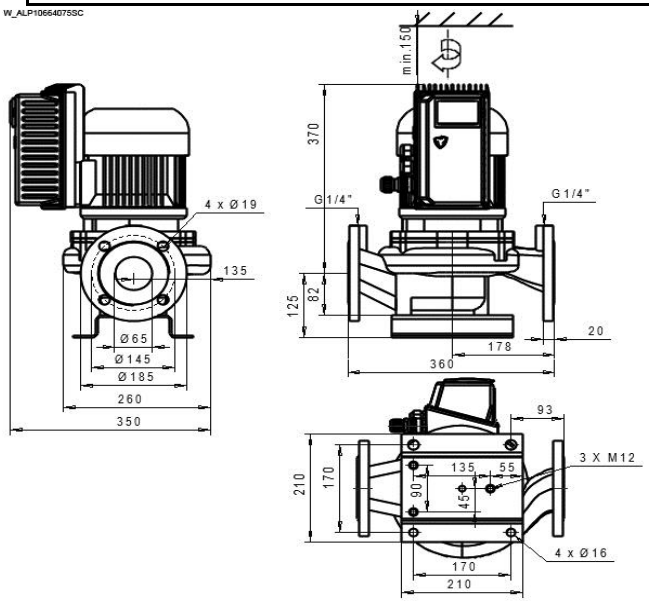

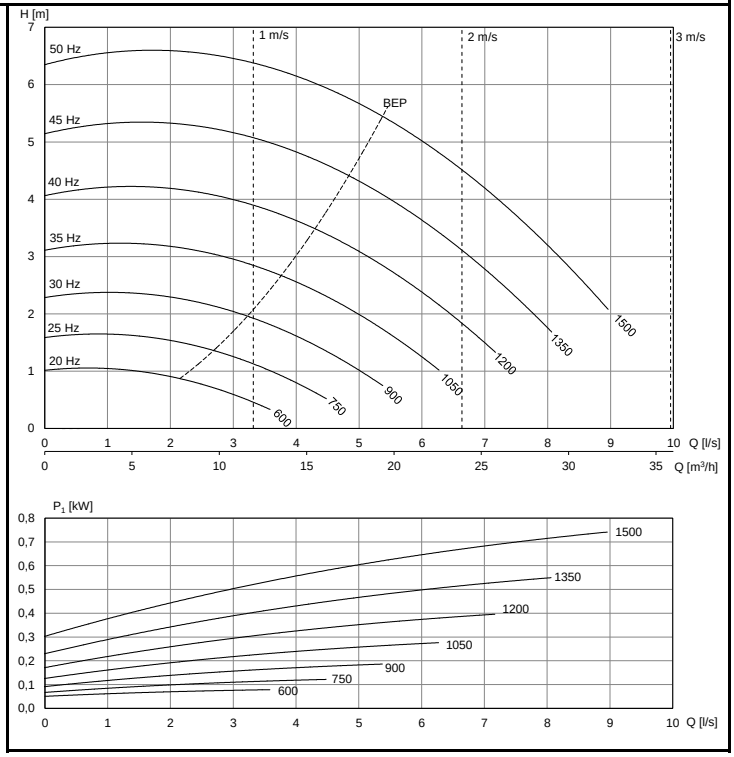

Motor	P_{2N} [kW]	I_N [A] (3x400V)	[kg]
KHSC-100 A2 F19	0,55	4,6	46

ALP-1066/4 SC

DN65	600 - 1500 r/min	Ø160	1~ 230 V

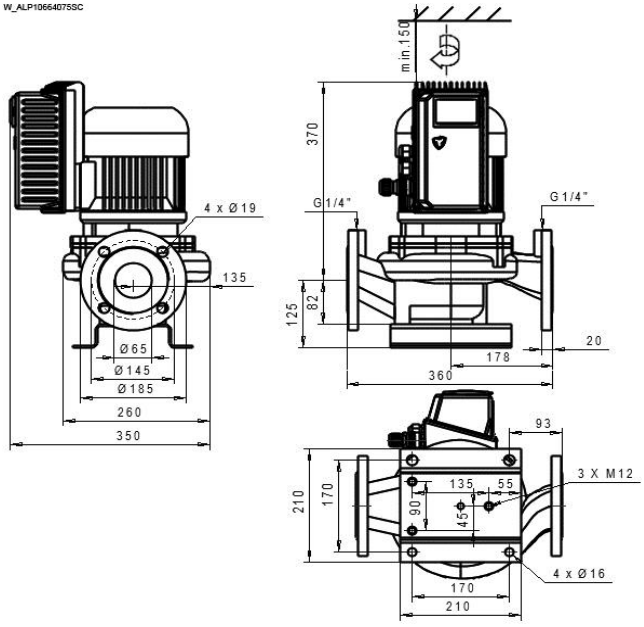

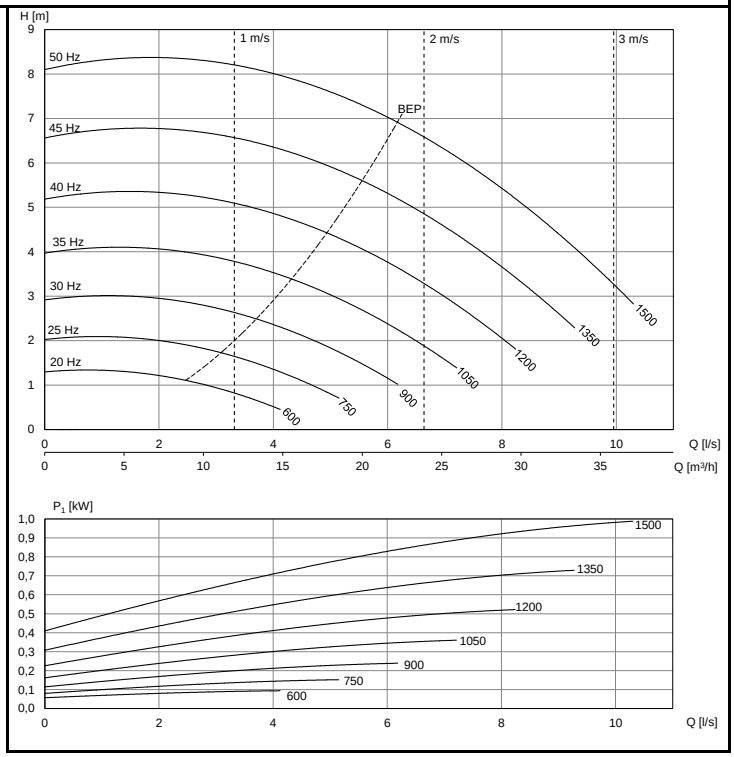

Motor	P_{2N} [kW]	I_N [A] (3x400V)	[kg]
KHSC-100 B2 F19	0,75	6,1	46

ALP-1102/4 SC

DN 100	600 - 1500 r/min	Ø 142 mm	1~ 230 V

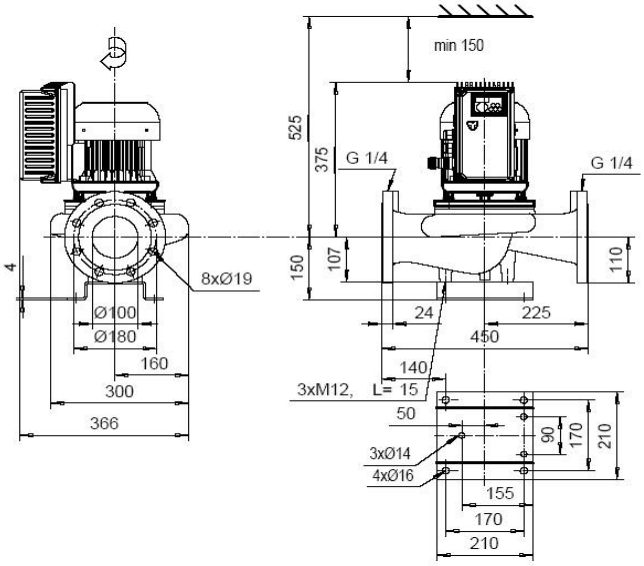

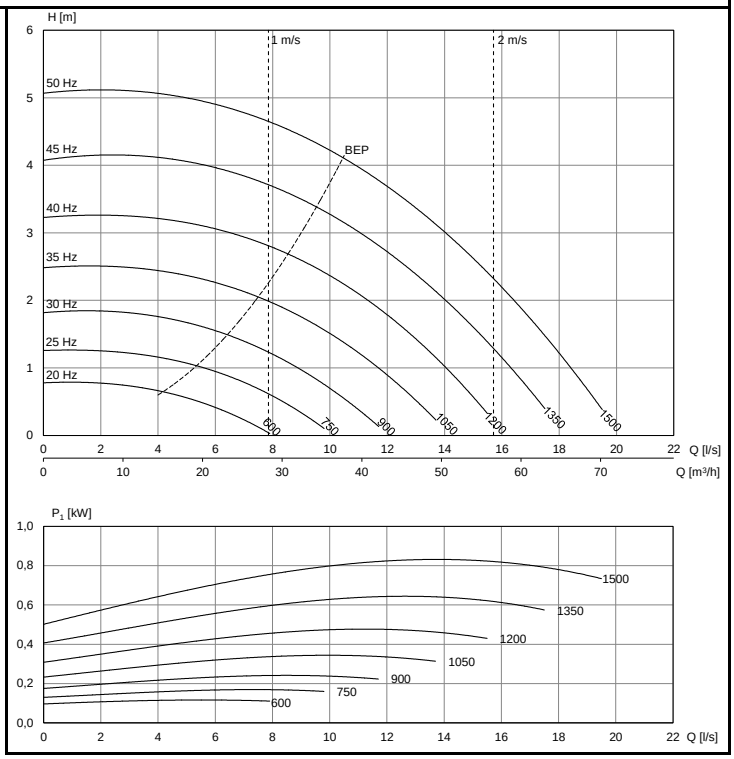

Motor	P_{2N} [kW]	I_N [A] (1x230V)	[kg]
KHSC-100 B2 F19	0,75	6,1	59

DATA SHEETS

INLINE PUMPS WITH INTEGRATED VS FREQUENCY CONVERTER

3x400V

AEP-series, threaded G1-G1¼

LP- and ALP-series, flanged DN50-DN150

AEP-26/2 VS

G 1	1200 - 3600 r/min	Ø125	3~ 400 V

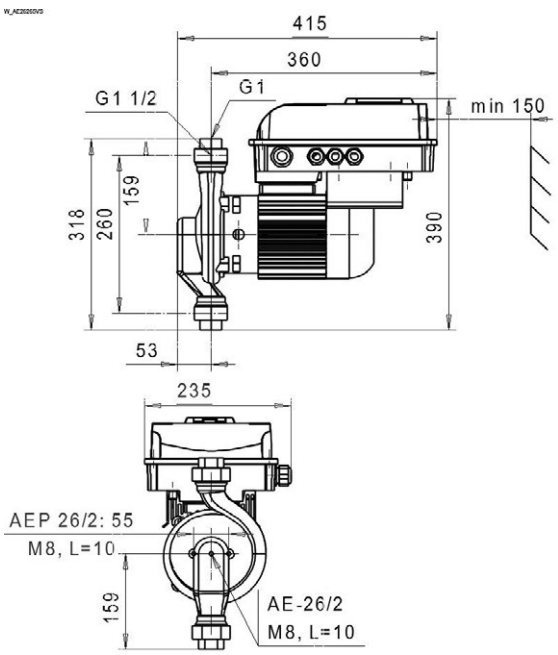

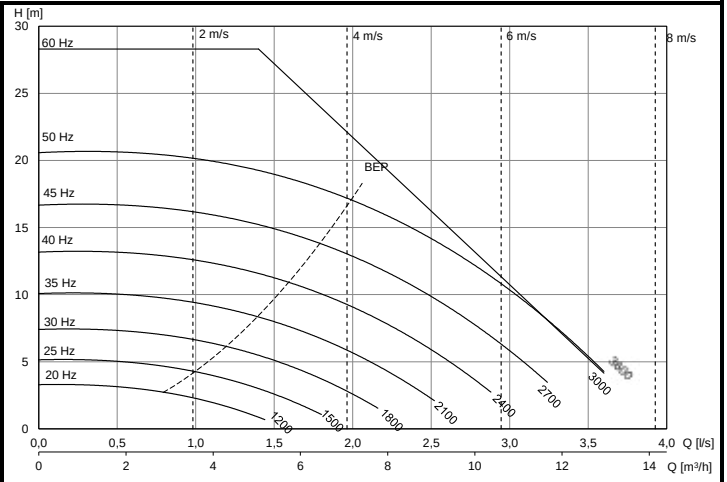

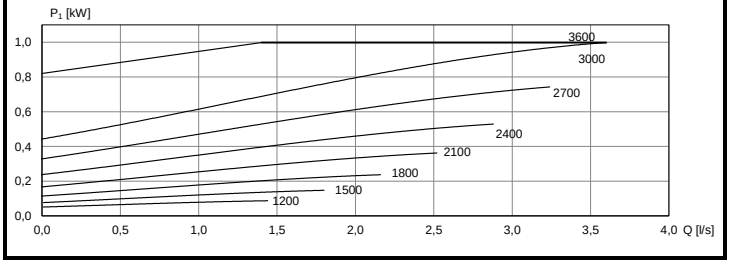

Motor	P_{2N} [kW]	I_N [A] (3x400V)	[kg]
KHVS-841 D N12	0,65	3,0	20

AEP-33/2 VS

G 1 1/4	1200 - 3600 r/min	Ø120	3~ 400 V

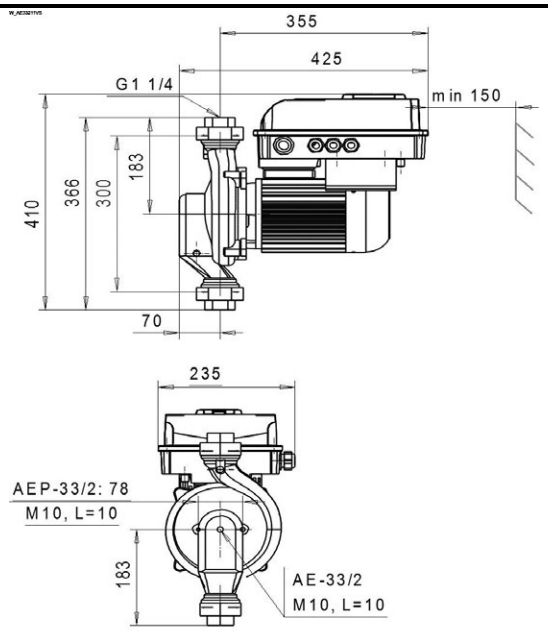

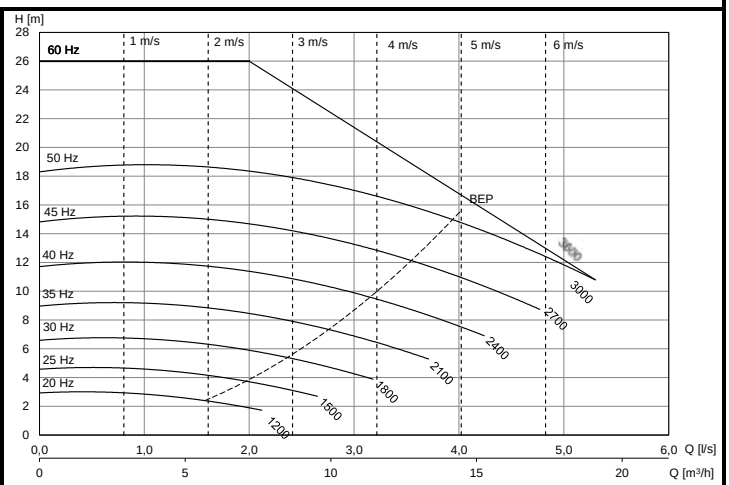

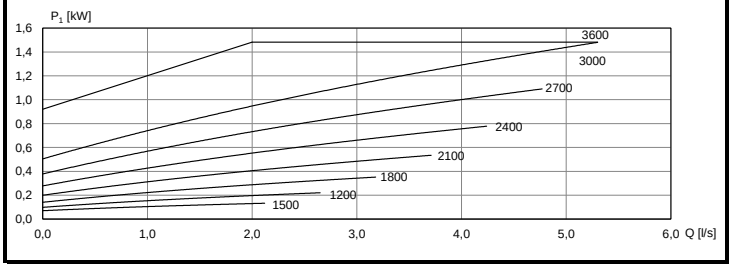

Motor	P_{2N} [kW]	I_N [A] (3x400V)	[kg]
KHVS-871 N13	1,1	4,0	27

AEP-33/2 VS

G 1 1/4	1200 - 3600 r/min	Ø135	3~ 400 V

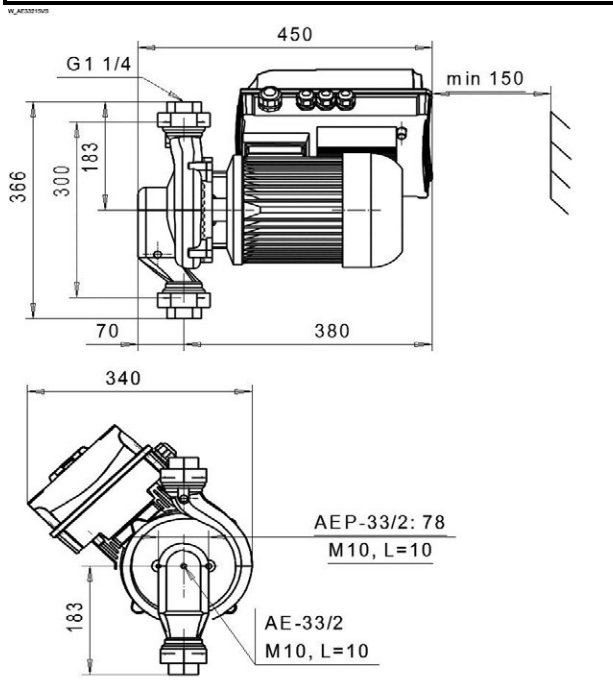

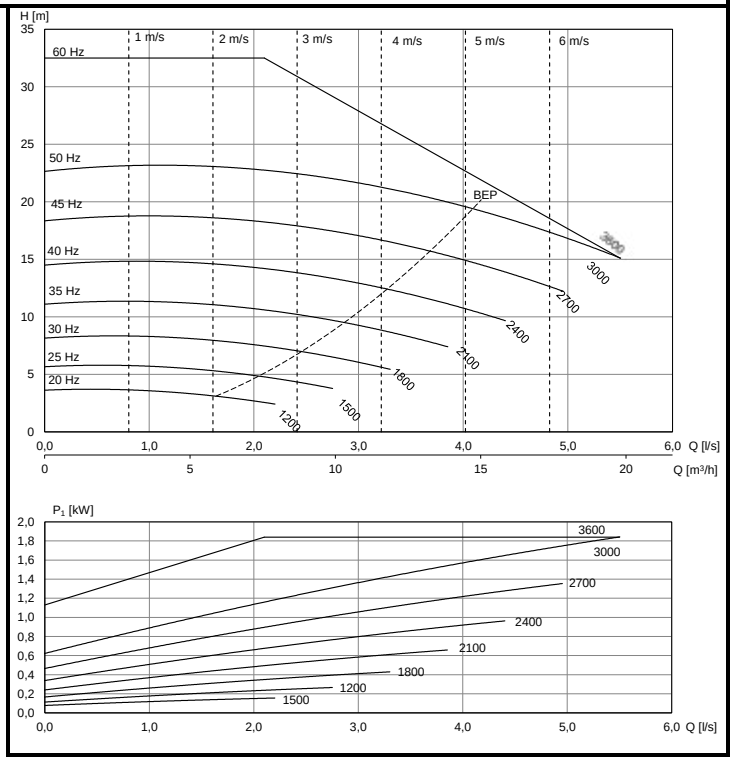

Motor	P_{2N} [kW]	I_N [A] (3x400V)	[kg]
KHVS-101 C1 N13	1,5	4,0	38

LP-50A/4 VS

DN50	600 - 1800 r/min	Ø150	3~ 400 V

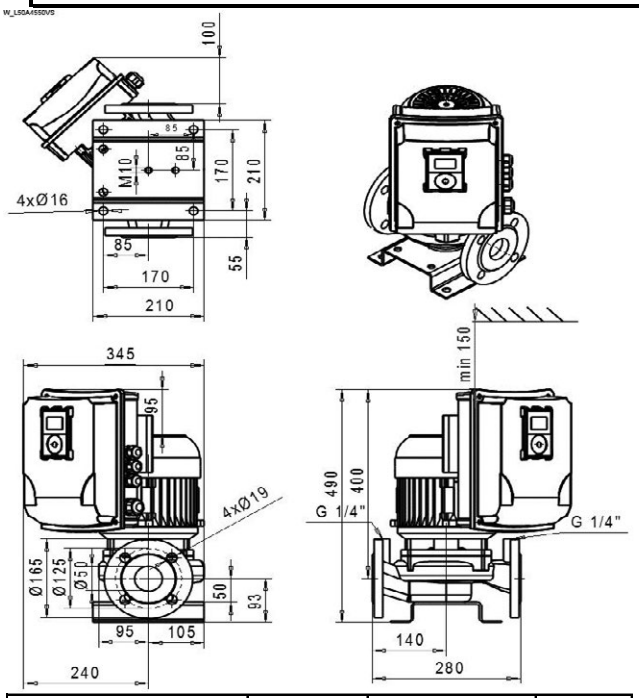

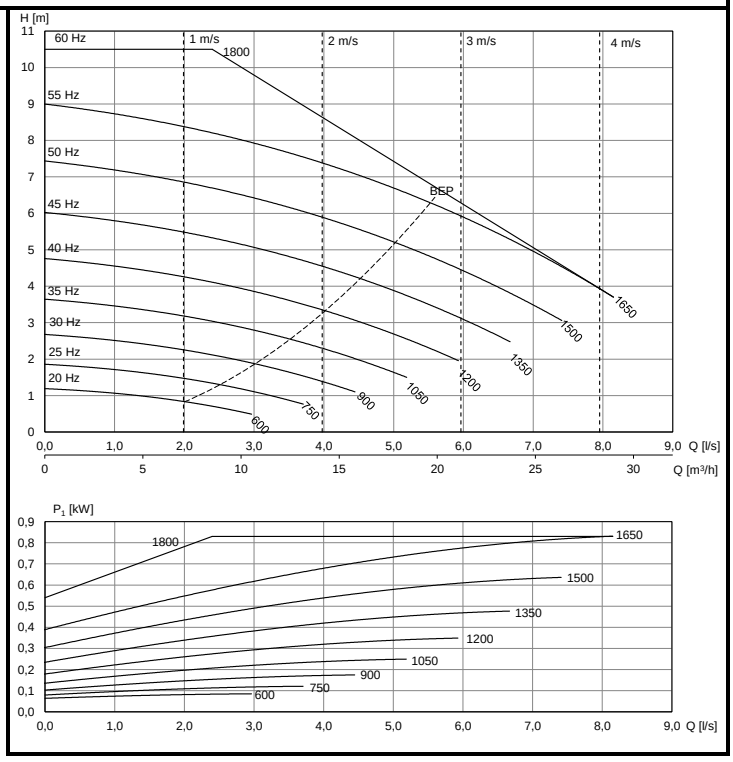

Motor	P_{2N} [kW]	I_N [A] (3x400V)	[kg]
KHVS-100 B2 F15	0,55	2,2	42

LP-50A/4 VS

DN50	600 - 2100 r/min	Ø150	3~ 400 V

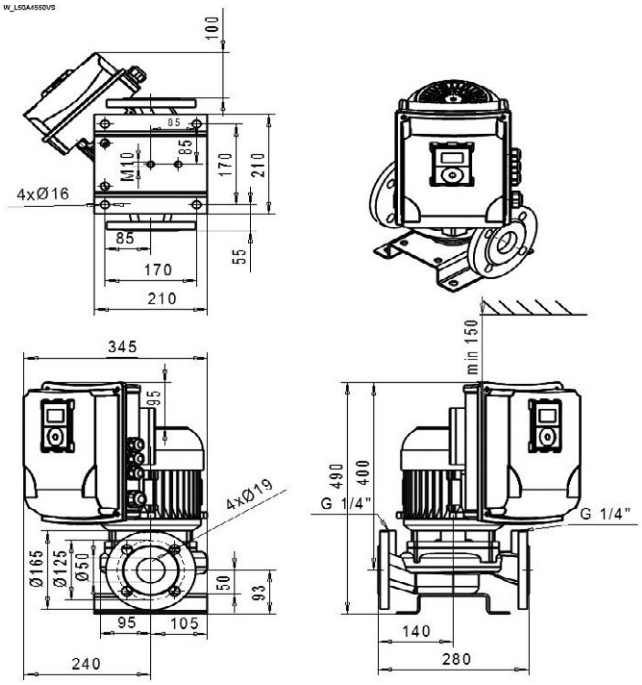

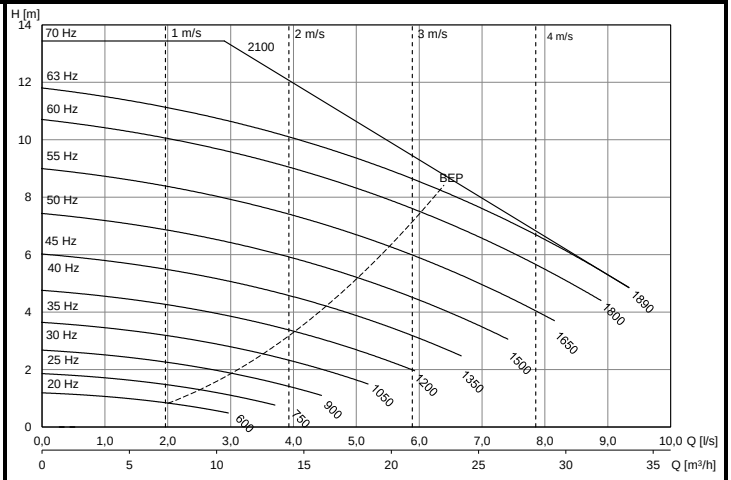

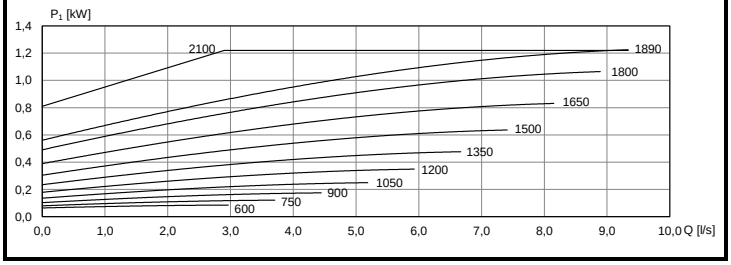

Motor	P_{2N} [kW]	I_N [A] (3x400V)	[kg]
KHVS-100 B2 F15	0,9	3,0	42

LP-50B/2 VS

DN50	1200 - 3600 r/min	Ø120	3~ 400 V

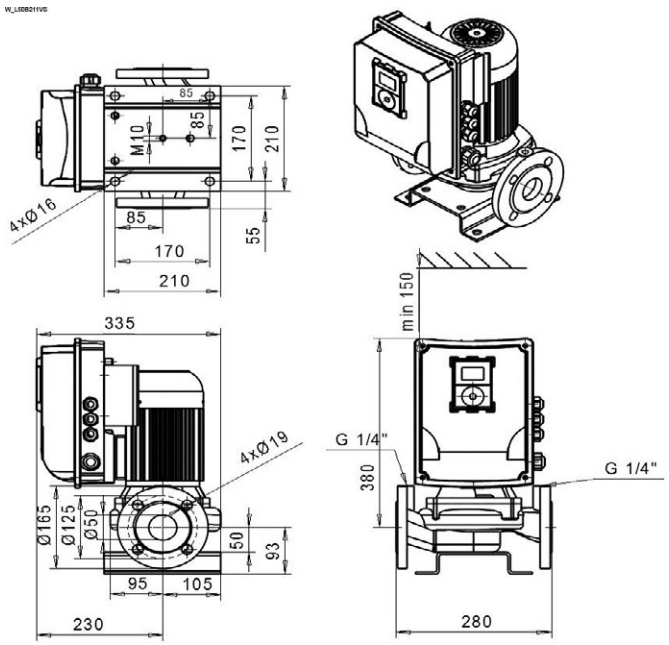

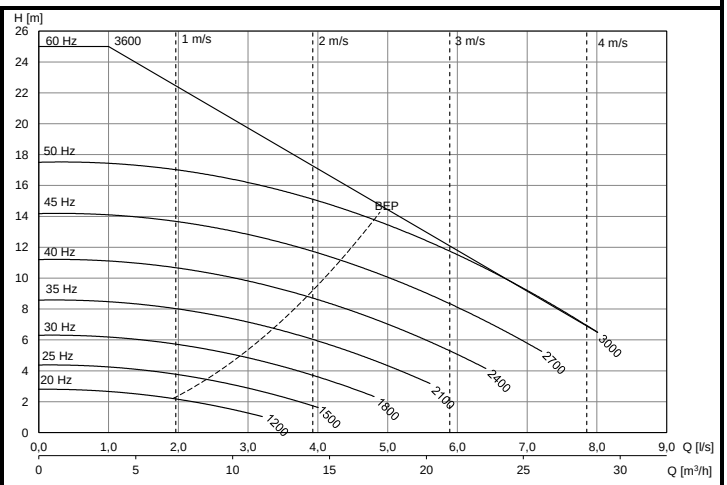

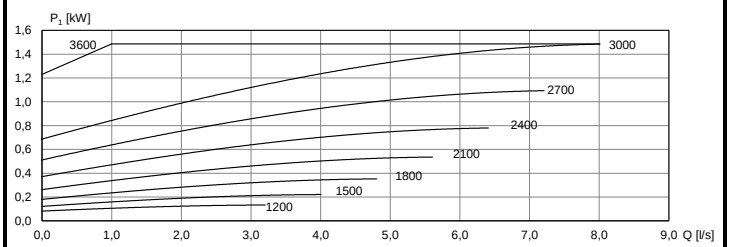

Motor	P_{2N} [kW]	I_N [A] (3x400V)	[kg]
KHVS-871 F15	1,1	4,0	36

LP-50D/2 VS

DN50	1200 - 3600 r/min	Ø130	3~ 400 V

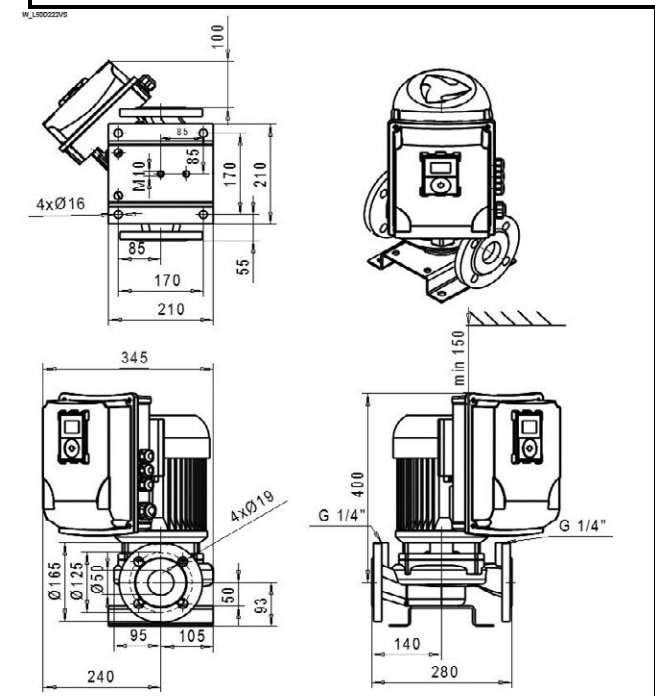

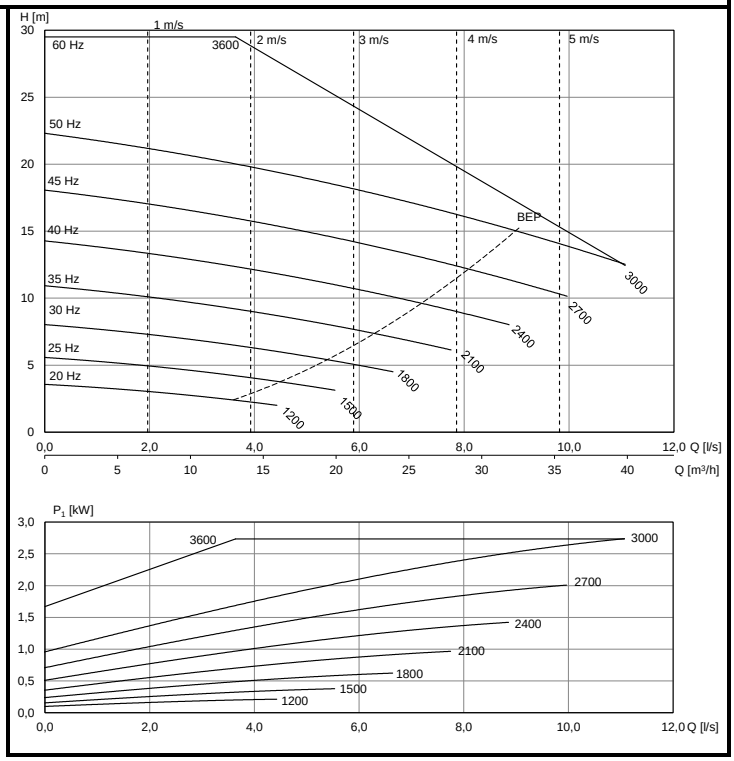

Motor	P_{2N} [kW]	I_N [A] (3x400V)	[kg]
KHVS-101 D1 F15	2,2	7,3	49

LP-50D/2 VS

DN50	1200 - 3600 r/min	Ø150	3~ 400 V

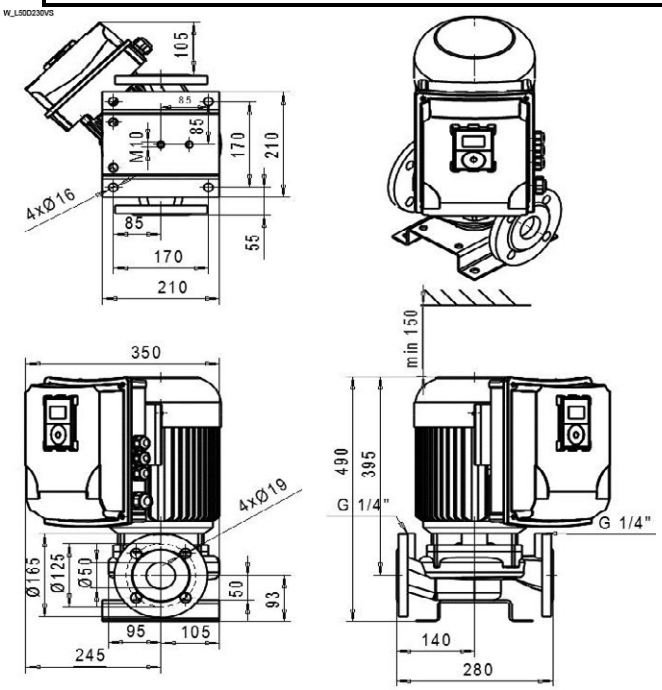

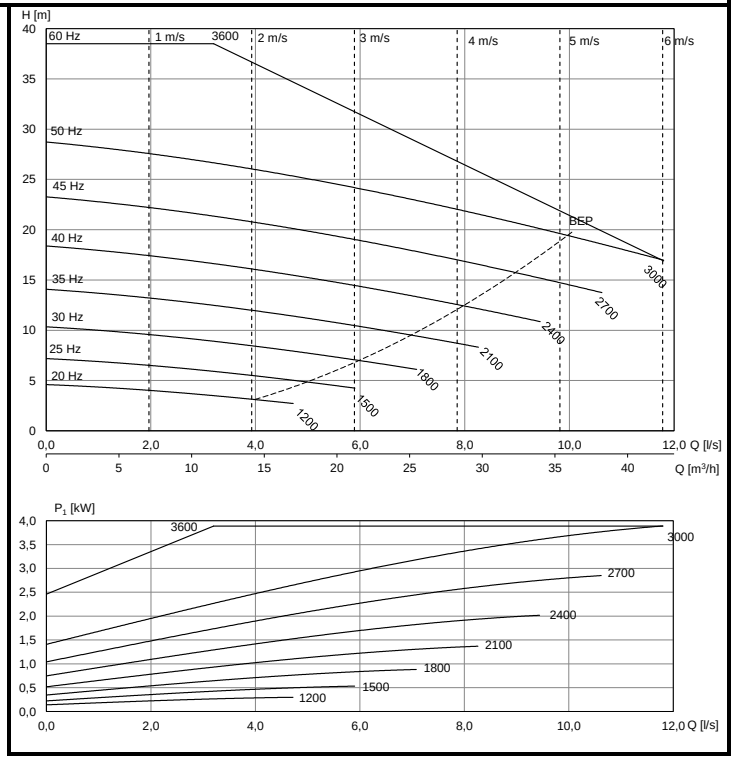

Motor	P_{2N} [kW]	I_N [A] (3x400V)	[kg]
KHVS-112 C1 F15	3	9,6	55

ALP-1066/4 VS

DN65	600 - 1800 r/min	Ø145	3~ 400 V

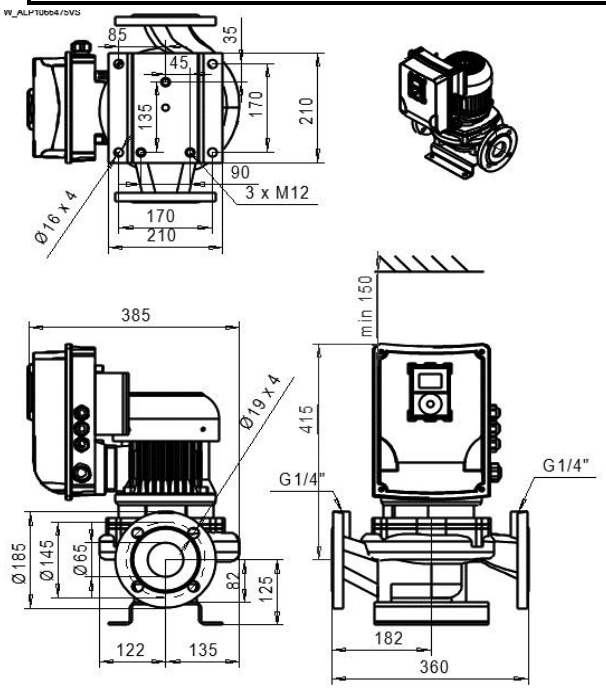

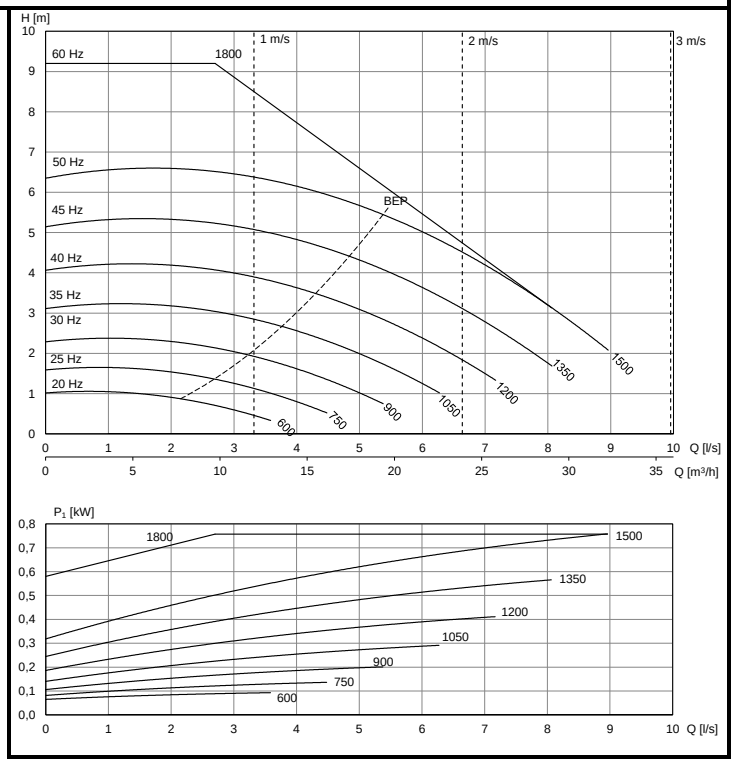

Motor	P_{2N} [kW]	I_N [A] (3x400V)	[kg]
KHVS-100 B2 F15	0,55	2,2	50

ALP-1066/4 VS

DN65	600 - 2100 r/min	Ø145	3~ 400 V

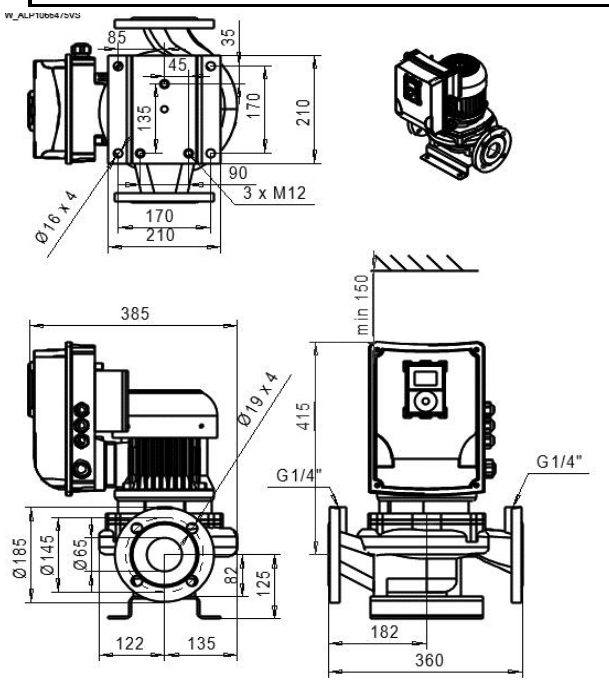

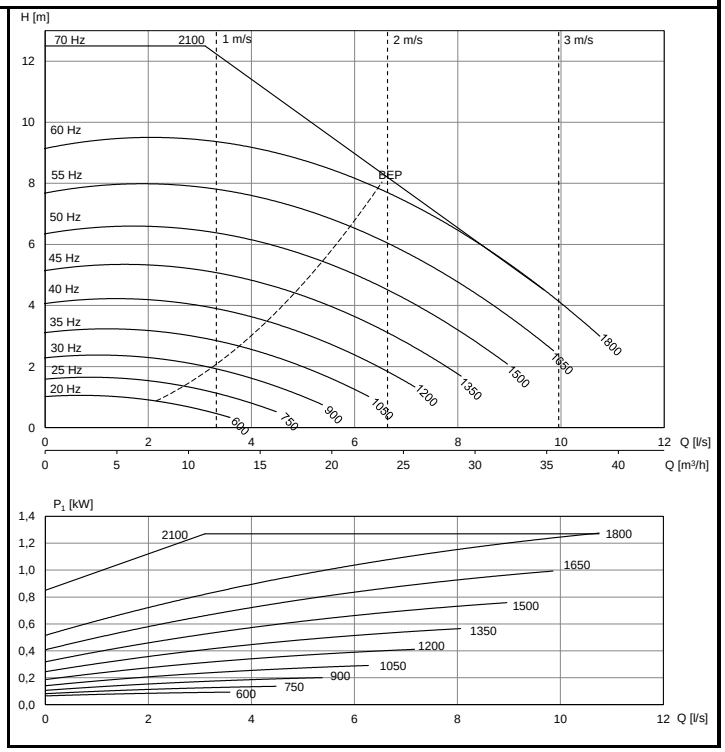

Motor	P_{2N} [kW]	I_N [A] (3x400V)	[kg]
KHVS-100 B2 F15	0,9	3,0	50

ALP-1066/4 VS

DN65	600 - 1800 r/min	Ø188	3~ 400 V

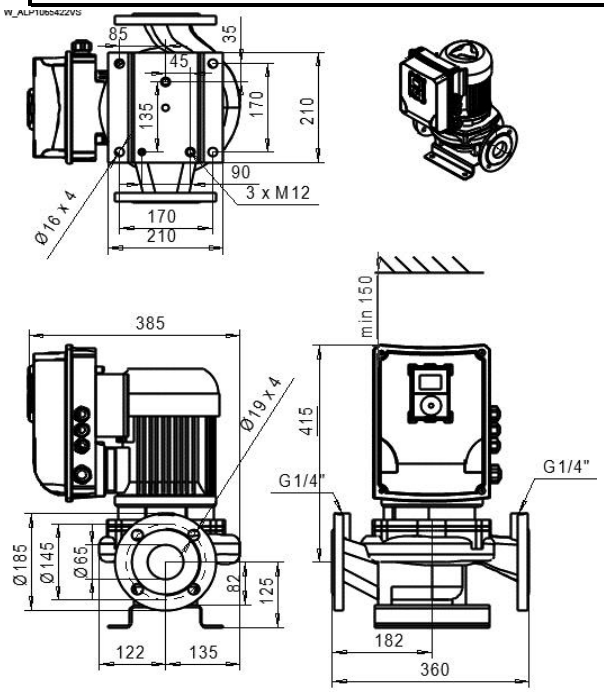

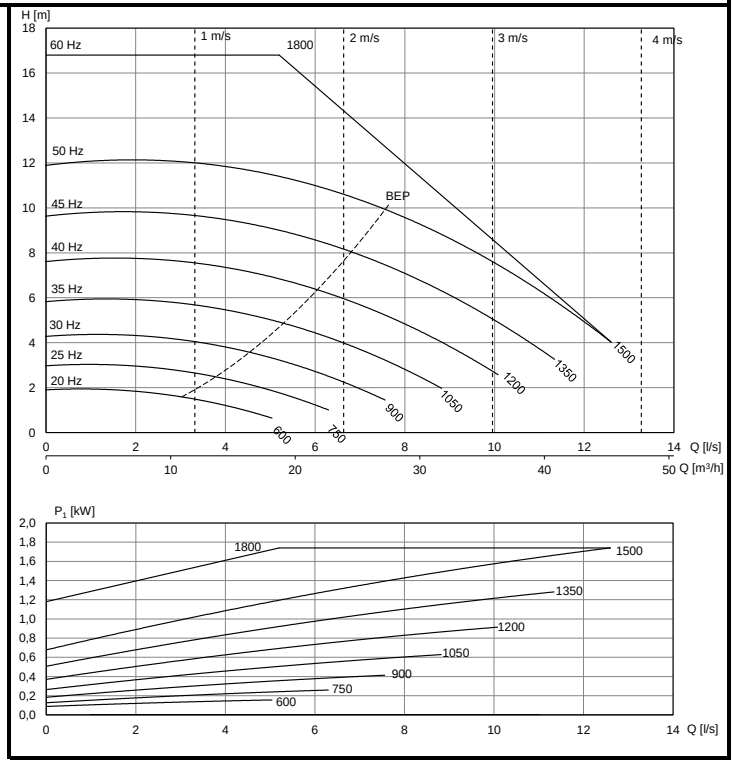

Motor	P_{2N} [kW]	I_N [A] (3x400V)	[kg]
KHVS-101 D2 F19	1,5	4,0	58

ALP-1066/4 VS

DN65	600 - 2100 r/min	Ø188	3~ 400 V

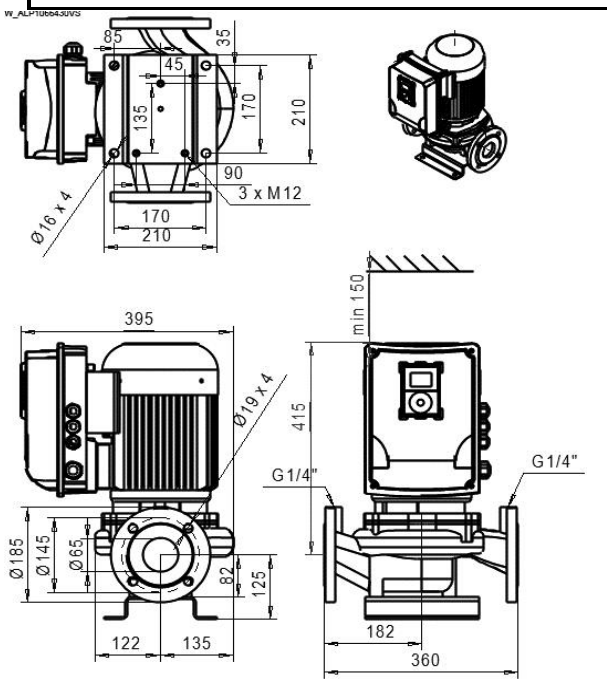

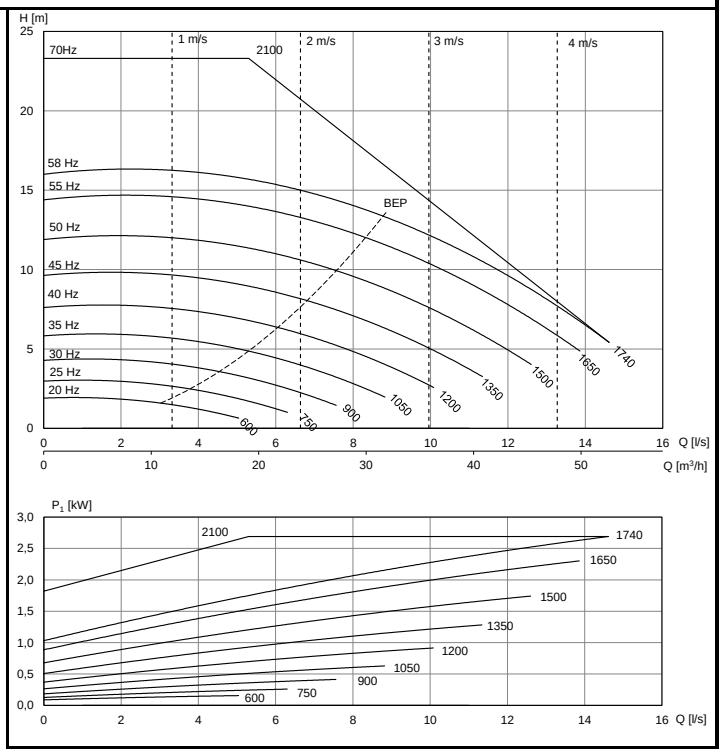

Motor	P_{2N} [kW]	I_N [A] (3x400V)	[kg]
KHVS-112 E2 F19	2,2	7,30	68

ALP-1066/4 VS

DN65	600 - 2250 r/min	Ø188	3~ 400 V

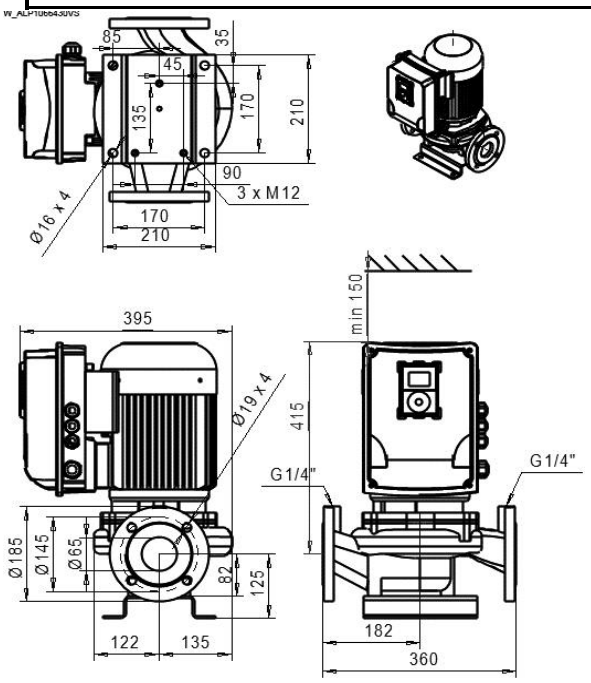

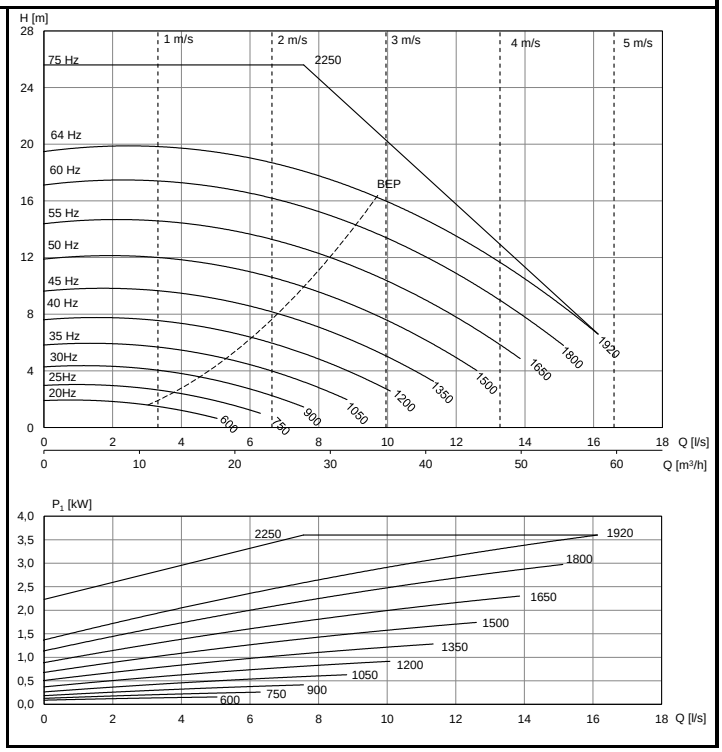

Motor	P_{2N} [kW]	I_N [A] (3x400V)	[kg]
KHVS-112 E2 F19	3	9,6	68

ALP-1065/2 VS

DN65	1200 - 3600 r/min	Ø148	3~ 400 V

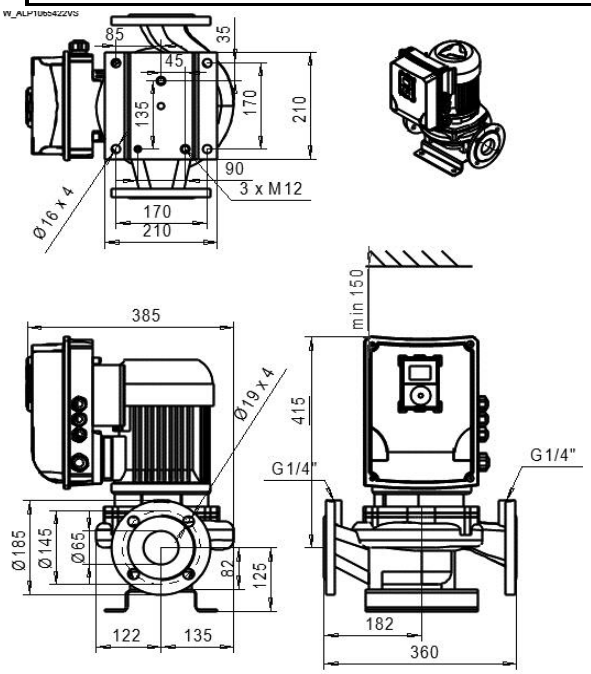

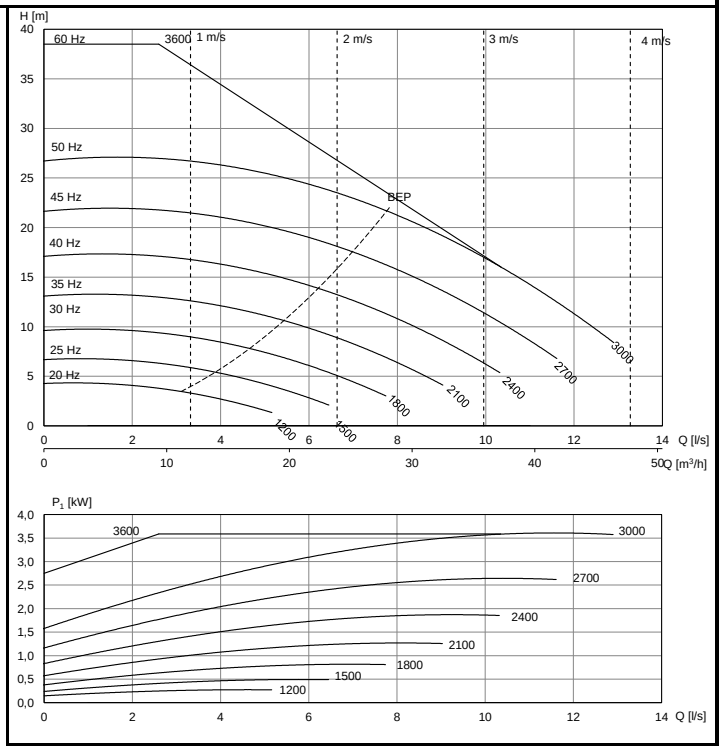

Motor	P_{2N} [kW]	I_N [A] (3x400V)	[kg]
KHVS-112 C1 F19	3	9,6	54

ALP-1065/2 VS

DN65	1200 - 3600 r/min	Ø158	3~ 400 V

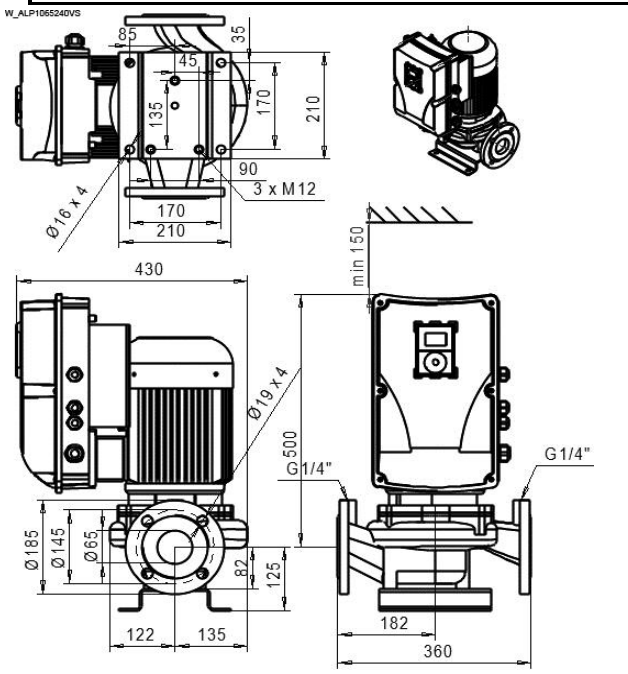

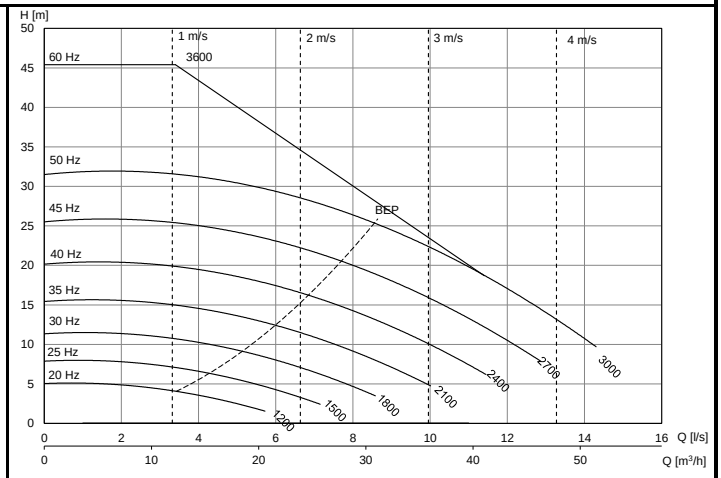

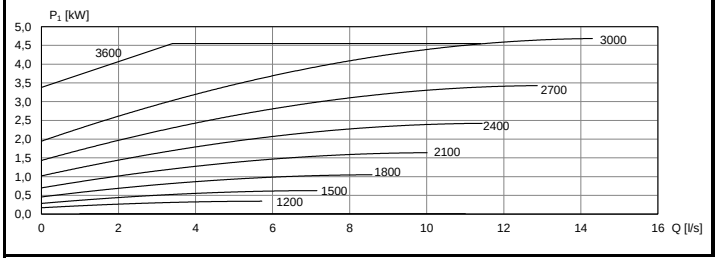

Motor	P_{2N} [kW]	I_N [A] (3x400V)	[kg]
KHVS-112 E1 F19	4	11,5	68

ALP-1065/2 VS

DN65	1200 - 3600 r/min	Ø174	3~ 400 V

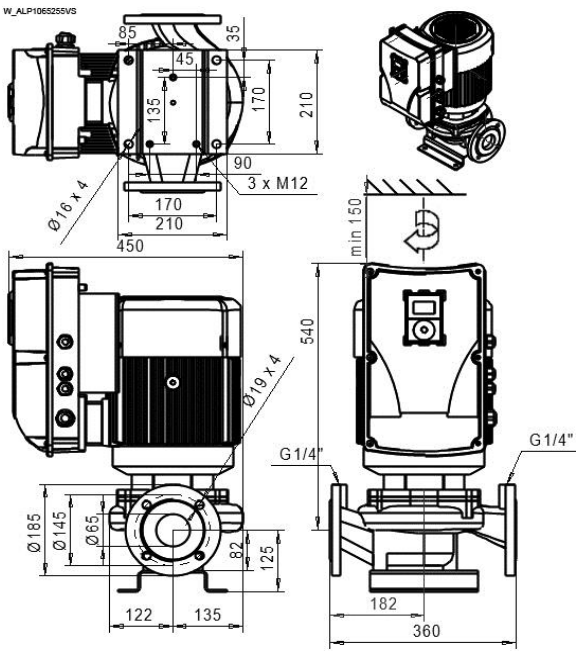

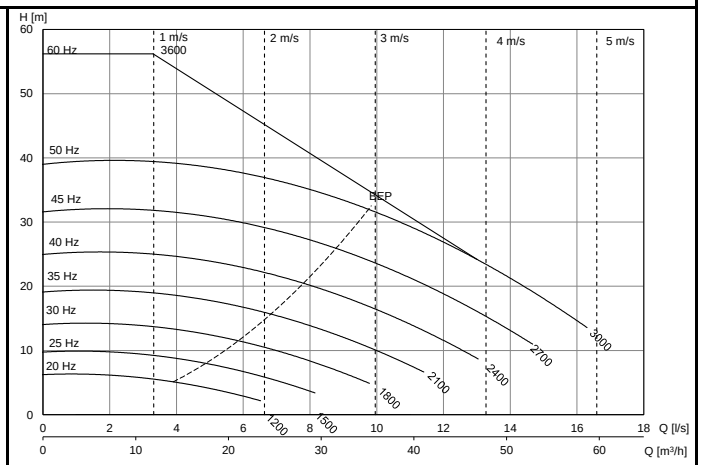

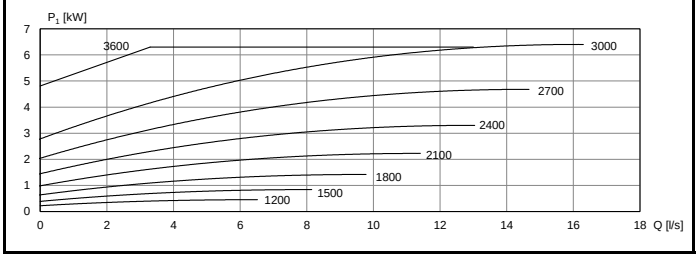

Motor	P_{2N} [kW]	I_N [A] (3x400V)	[kg]
KHVS-132 C1 F19	5,5	14,2	95

ALP-1065/2 VS

DN65	1200 - 3600 r/min	Ø184	3~ 400 V

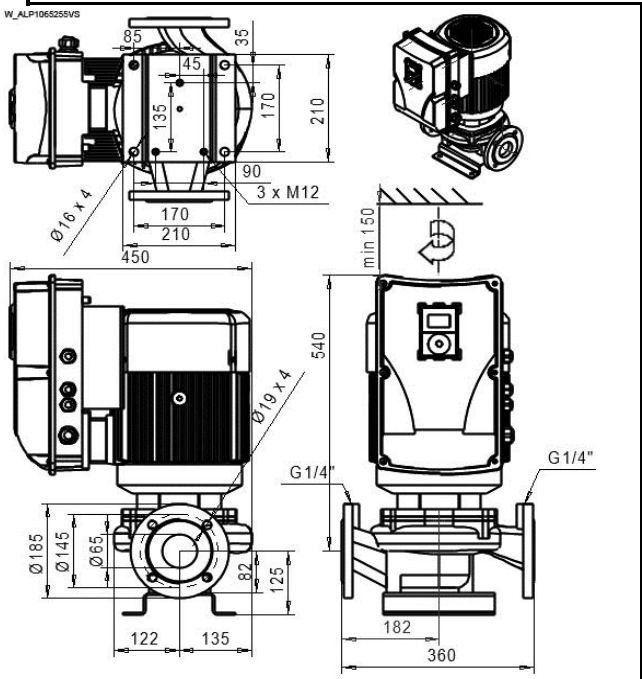

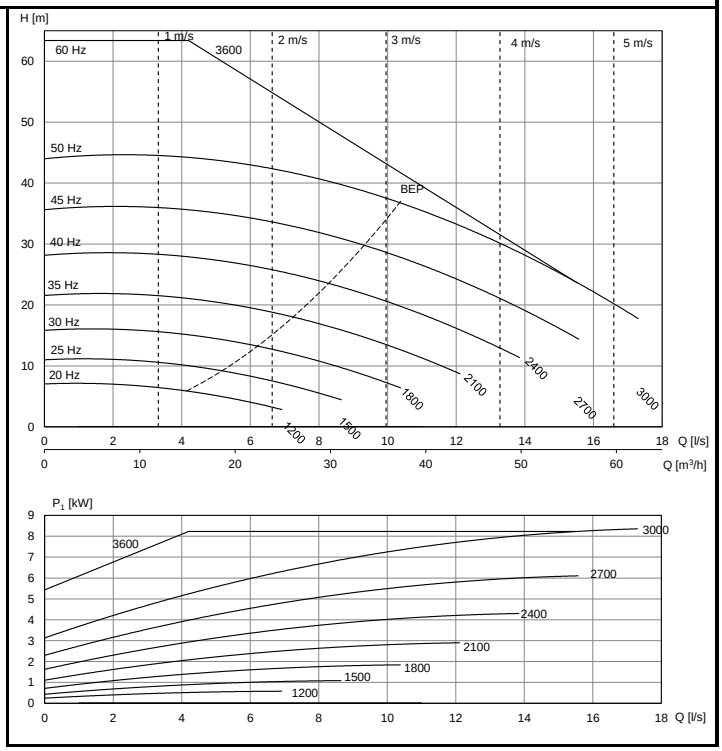

Motor	P_{2N} [kW]	I_N [A] (3x400V)	[kg]
KPVS-132 E1 F19	7,5	20,0	103

ALP-1102/4 VS

DN100	600 - 1650 r/min	Ø142	3~ 400 V

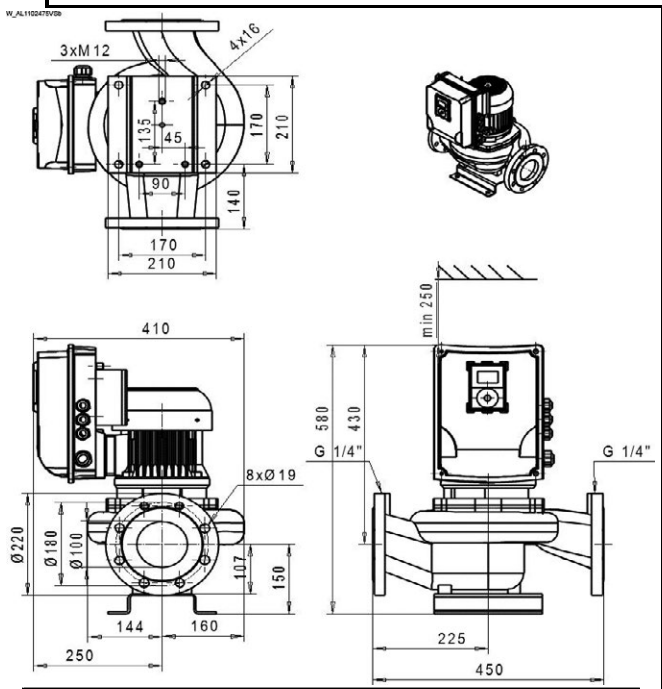

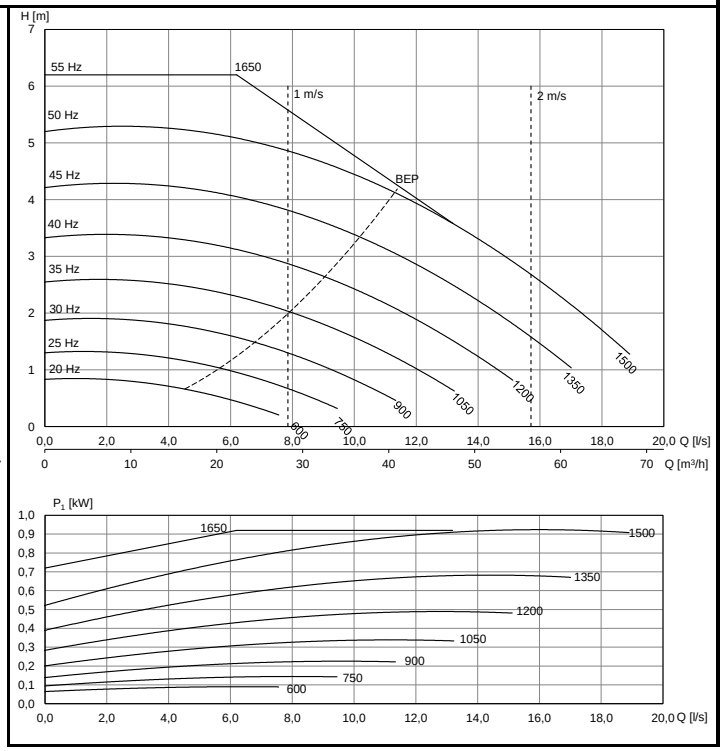

Motor	P_{2N} [kW]	I_N [A] (3x400V)	[kg]
KHVS-100 B2 F19	0,75	3,0	66

ALP-1102/4 VS

DN100	600 - 1650 r/min	Ø172	3~ 400 V

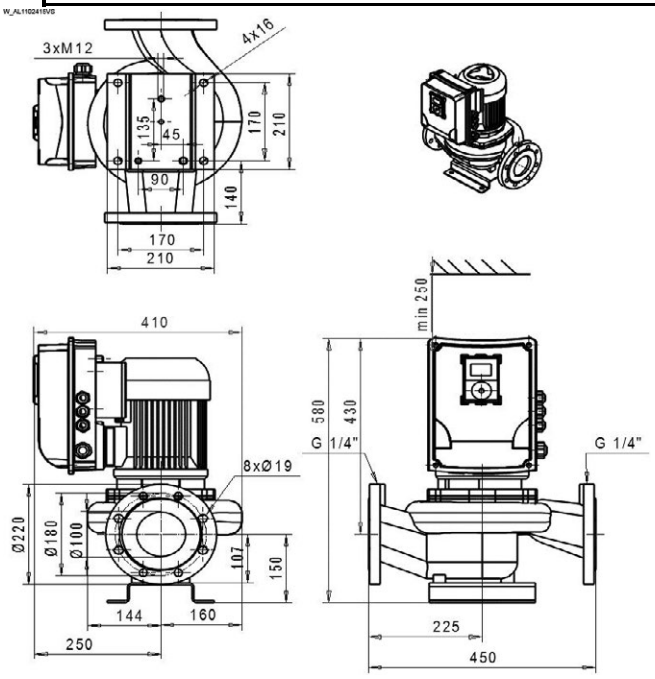

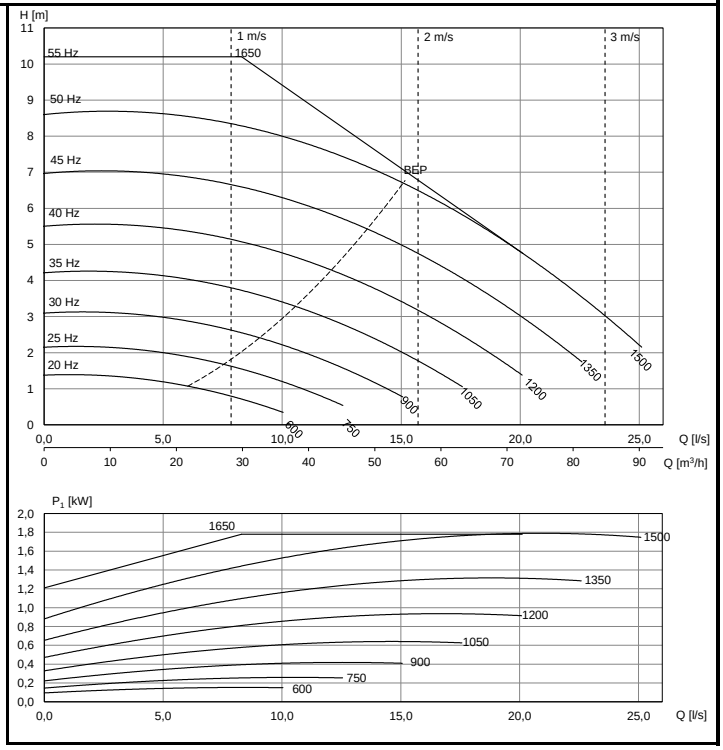

Motor	P_{2N} [kW]	I_N [A] (3x400V)	[kg]
KHVS-101 D2 F19	1,5	4,0	69

ALP-1102/4 VS

DN100	600 - 1650 r/min	Ø188	3~ 400 V

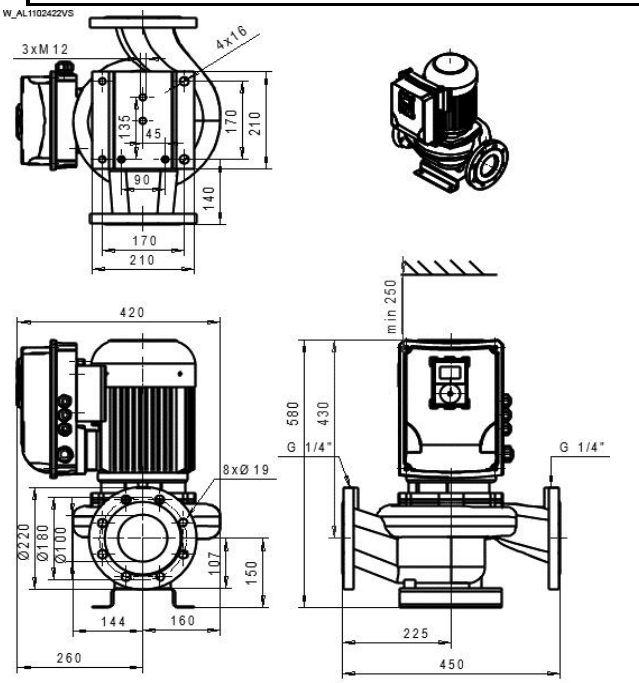

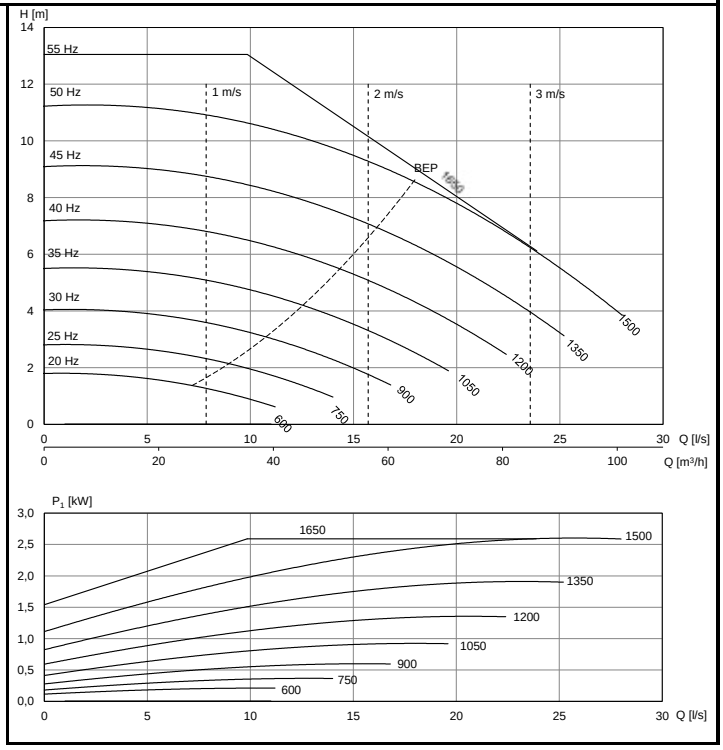

Motor	P_{2N} [kW]	I_N [A] (3x400V)	[kg]
KHVS-112 E2 F19	2,2	7,30	75

ALP-1102/4 VS

DN100	600 - 1950 r/min	Ø181	3~ 400 V

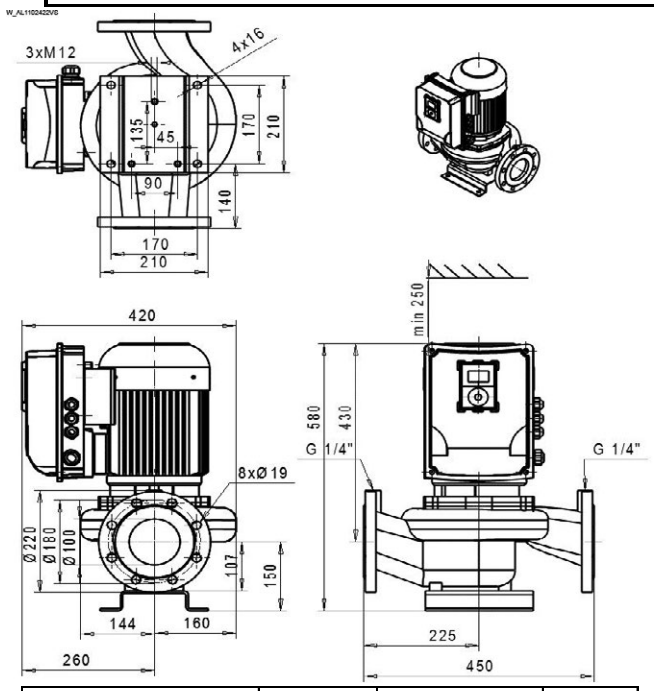

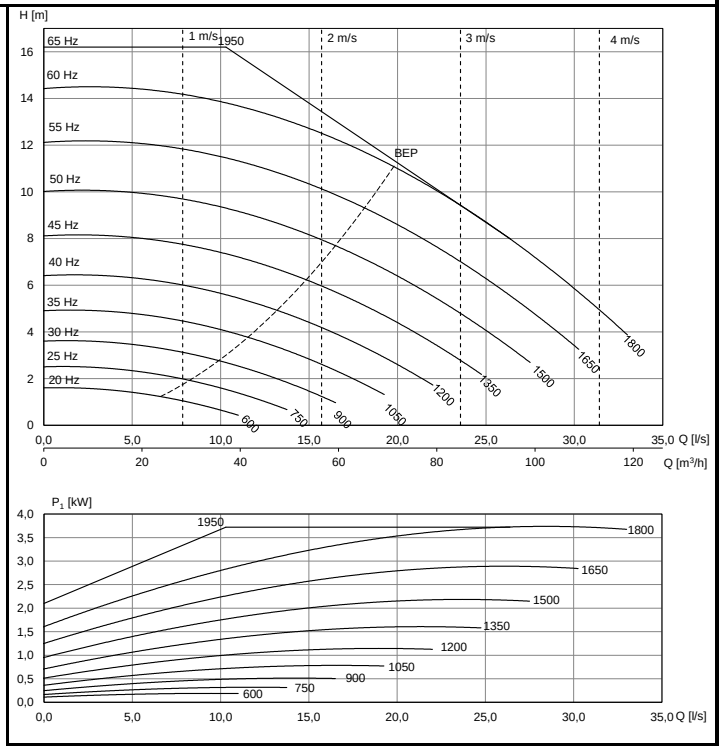

Motor	P_{2N} [kW]	I_N [A] (3x400V)	[kg]
KHVS-112 E2 F19	3	9,6	75

ALP-1102/2 VS

DN100	1200 - 3300 r/min	Ø128	3~ 400 V

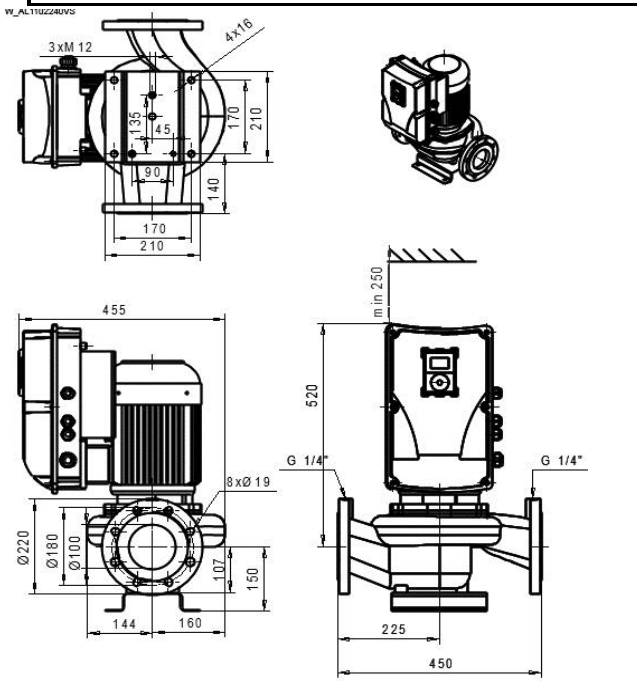

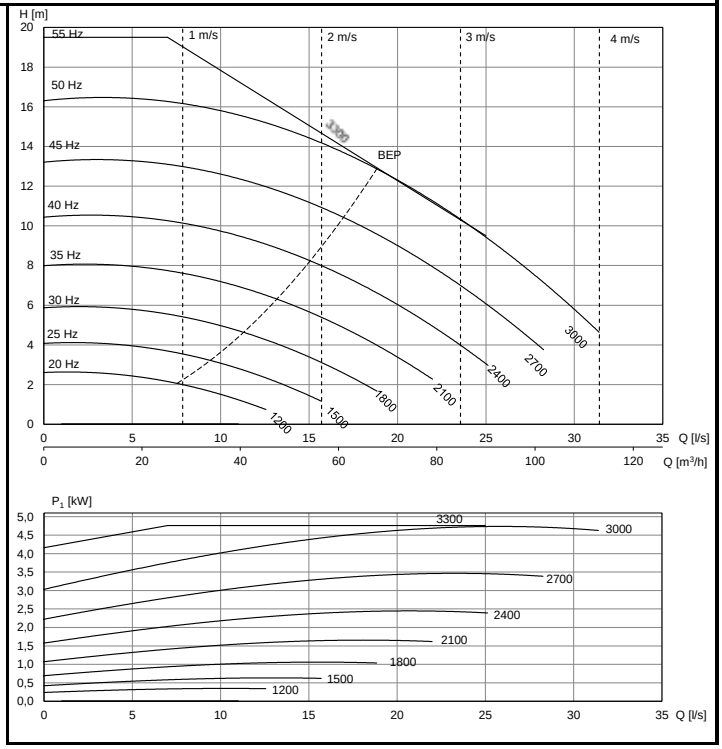

Motor	P_{2N} [kW]	I_N [A] (3x400V)	[kg]
KHVS-112 E1 F19	4	11,5	83

ALP-1102/2 VS

DN100	1200 - 3300 r/min	Ø138	3~ 400 V

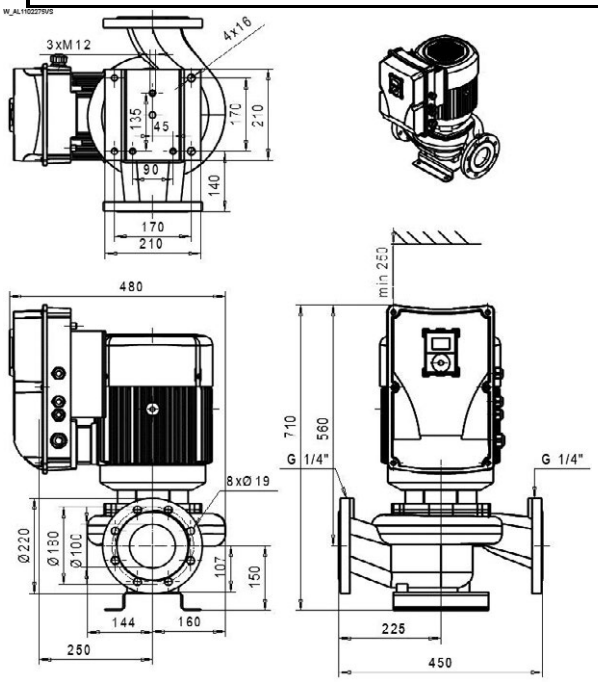

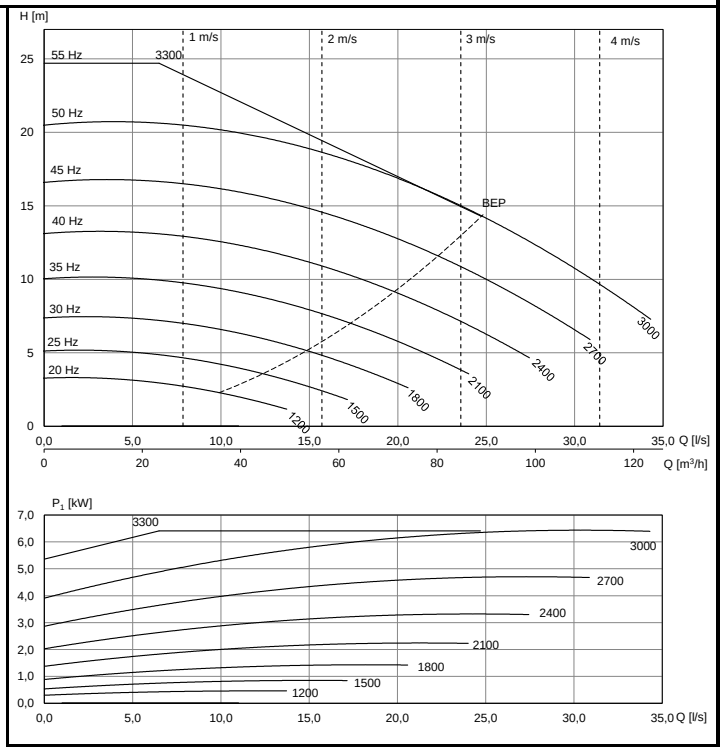

Motor	P_{2N} [kW]	I_N [A] (3x400V)	[kg]
KHVS-132 C1 F19	5,5	14,2	107

ALP-1102/2 VS

DN100	1200 - 3300 r/min	Ø149	3~ 400 V

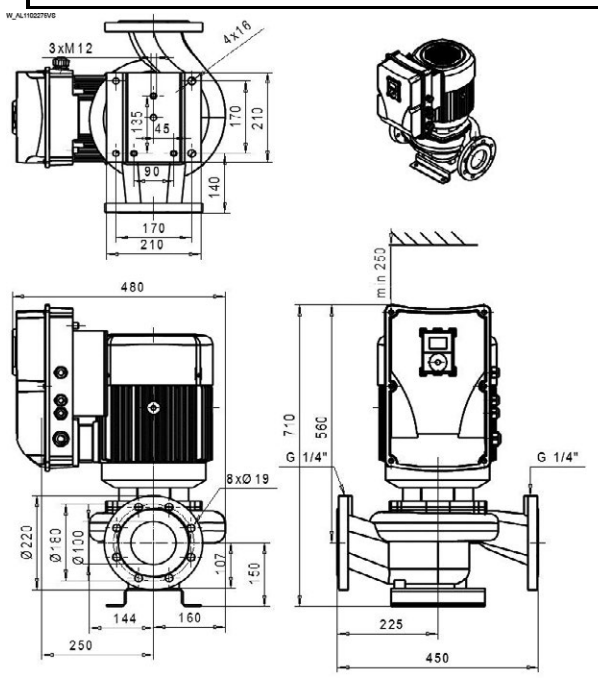

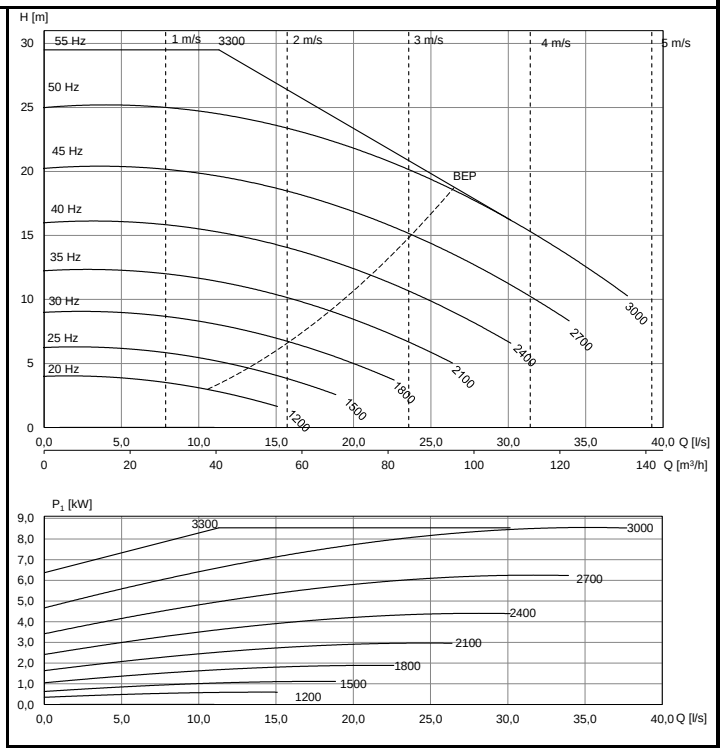

Motor	P_{2N} [kW]	I_N [A] (3x400V)	[kg]
KPVS-132 E1 F19	7,5	20,0	114

LP-100S/4 VS

DN100	600 - 1800 r/min	Ø225	3~ 400 V

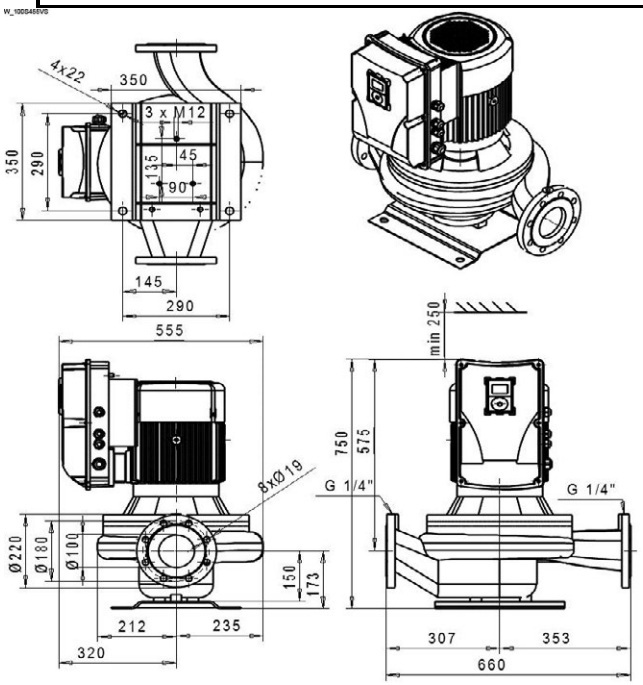

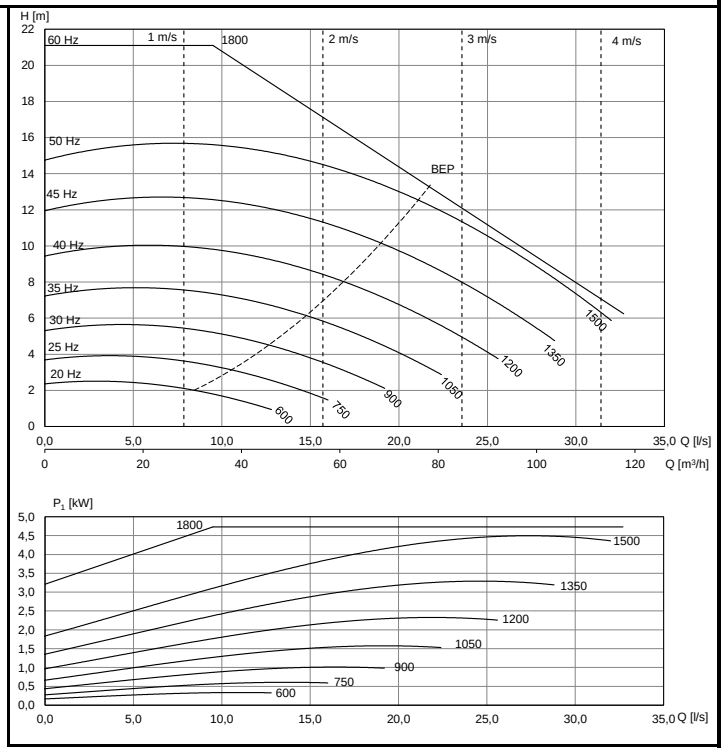

Motor	P_{2N} [kW]	I_N [A] (3x400V)	[kg]
KHVS-132 C2 F31	4	11,5	175

LP-100S/4 VS

DN100	600 - 1800 r/min	Ø247	3~ 400 V

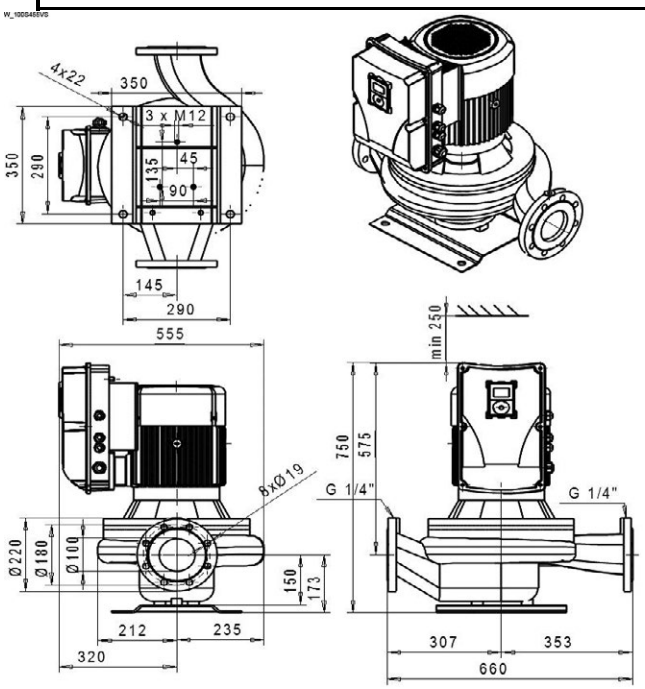

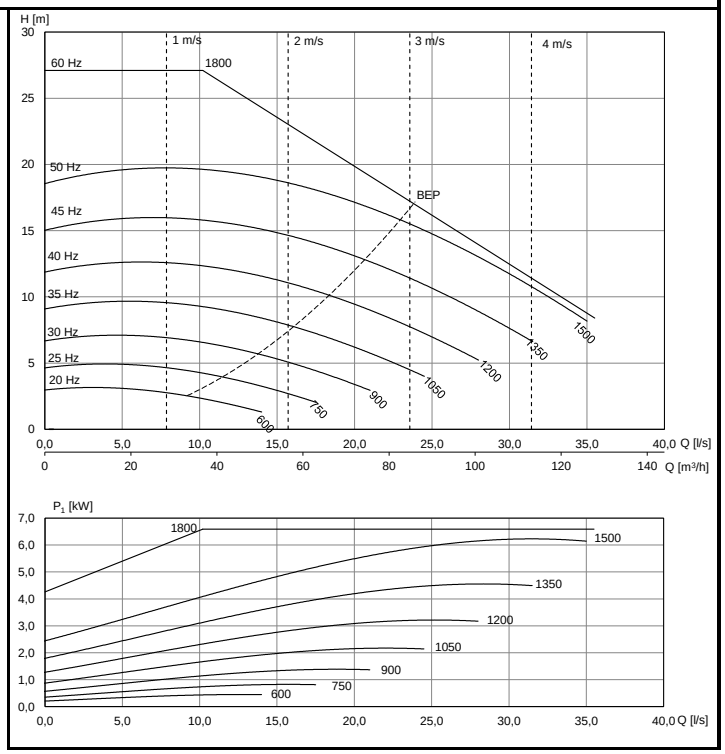

Motor	P_{2N} [kW]	I_N [A] (3x400V)	[kg]
KHVS-132 E2 F31	5,5	14,2	185

LP-100S/4 VS

DN100	600 - 1800 r/min	Ø270	3~ 400 V

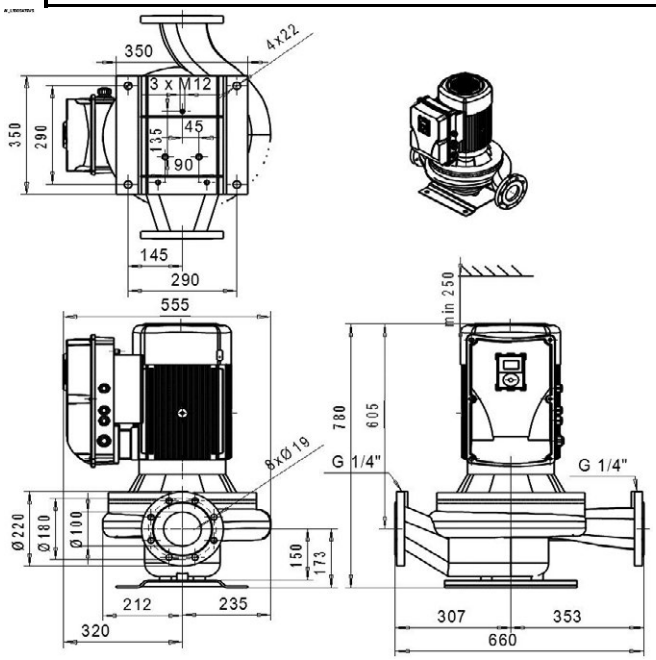

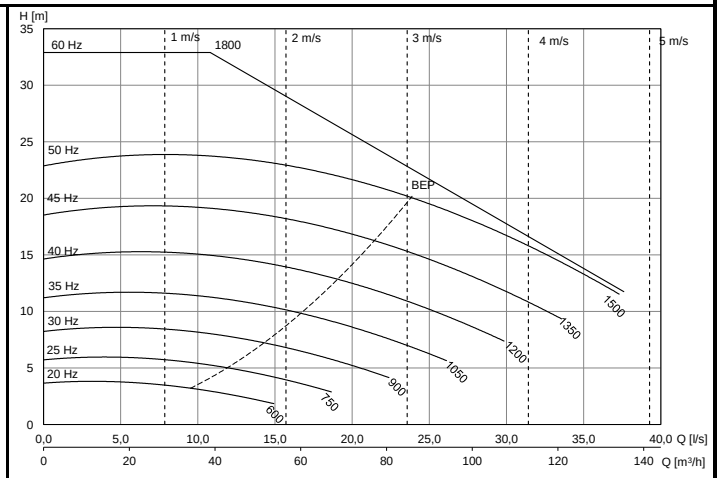

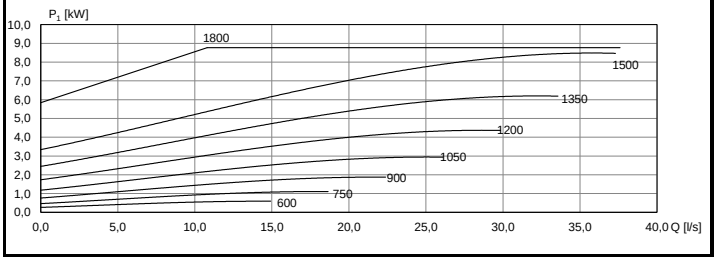

Motor	P_{2N} [kW]	I_N [A] (3x400V)	[kg]
KPVS-134 H2 F31	7,5	20,0	210

ALP-1128/4 VS

DN125	600 - 1800 r/min	Ø200	3~ 400 V

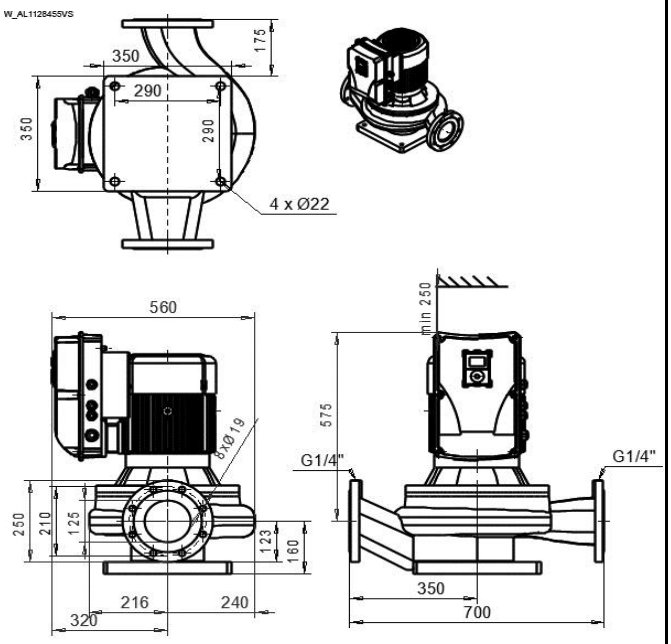

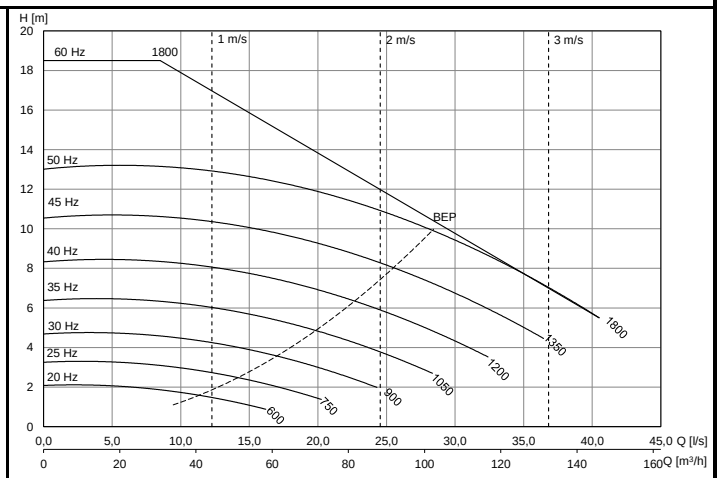

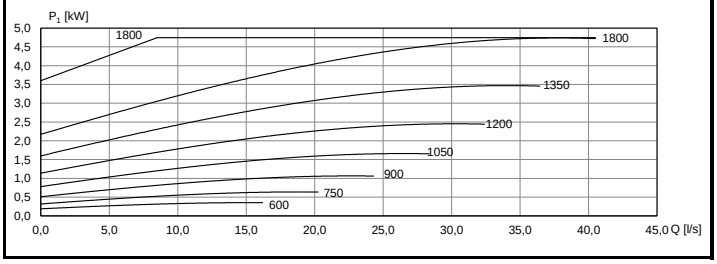

Motor	P_{2N} [kW]	I_N [A] (3x400V)	[kg]
KHVS-132 C2 F31	4	11,5	174

ALP-1128/4 VS

DN125	600 - 1800 r/min	Ø222	3~ 400 V

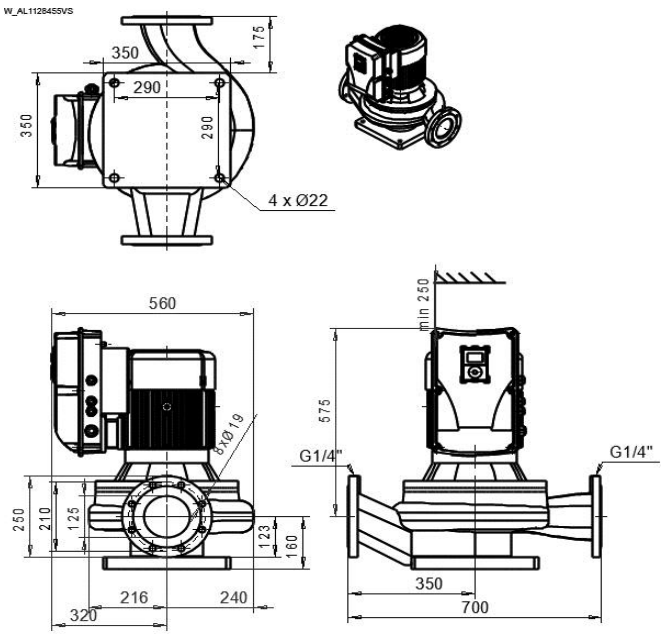

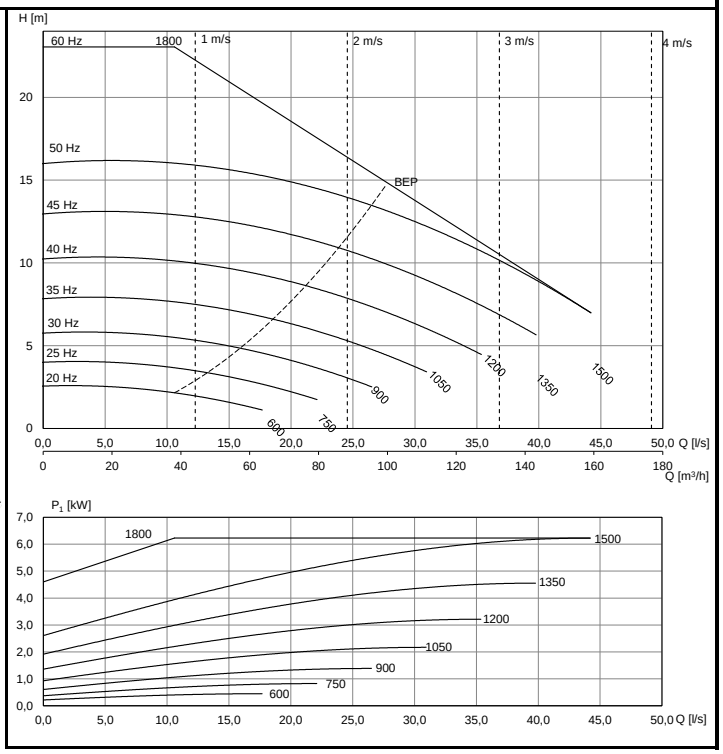

Motor	P_{2N} [kW]	I_N [A] (3x400V)	[kg]
KHVS-132 E2 F31	5,5	14,2	181

ALP-1128/4 VS

DN125	600 - 1800 r/min	Ø242	3~ 400 V

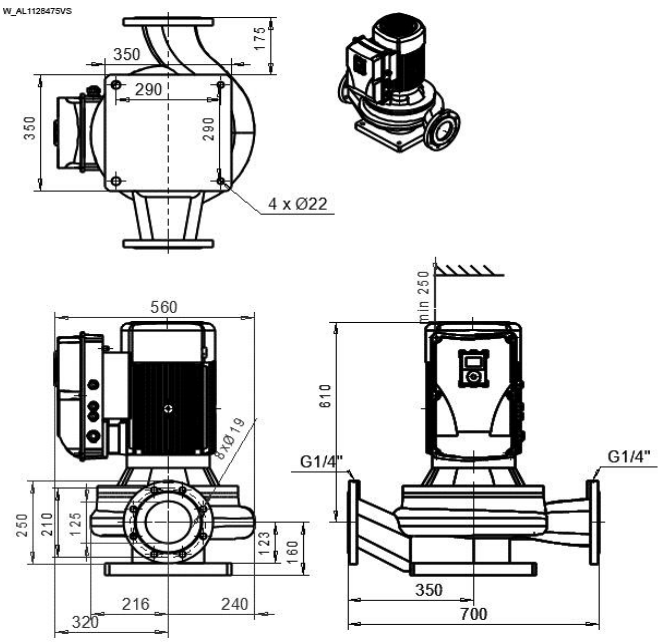

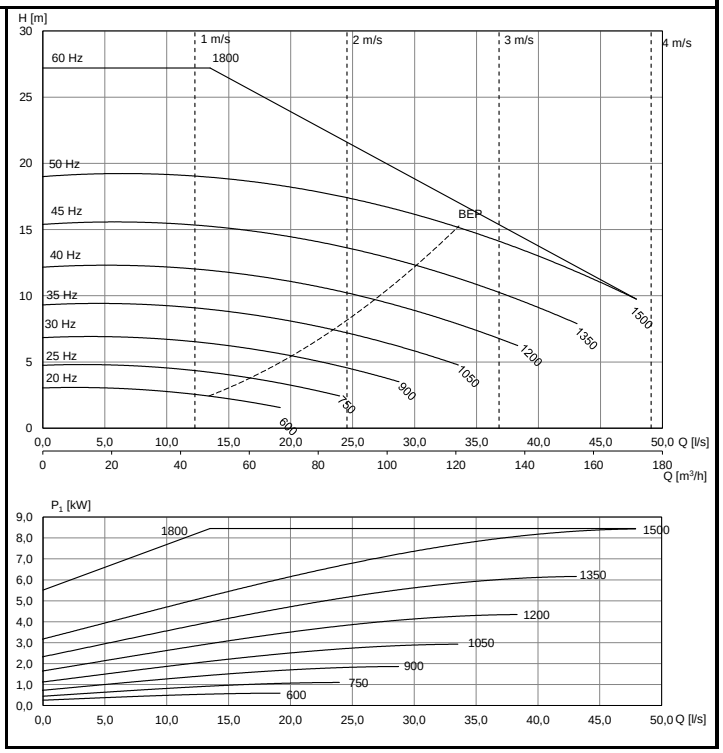

Motor	P_{2N} [kW]	I_N [A] (3x400V)	[kg]
KPVS-134 H2 F31	7,5	20,0	208

ALP-1153/4 VS

DN150	600 - 1650 r/min	Ø240	3~ 400 V

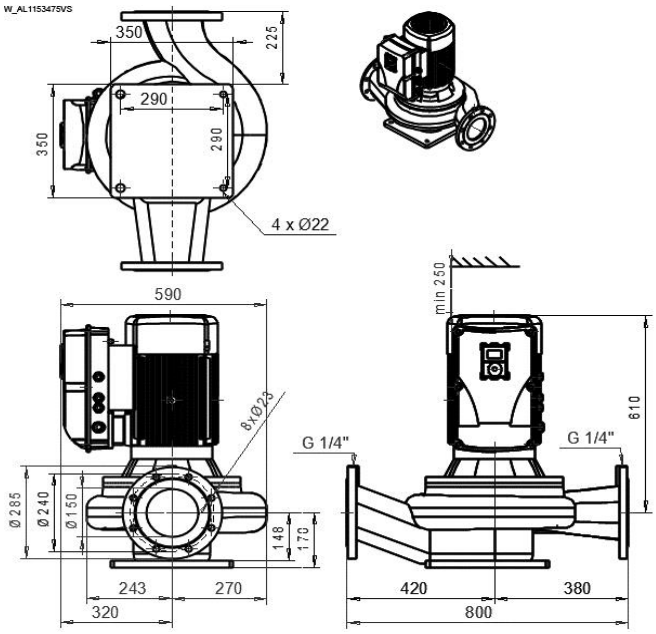

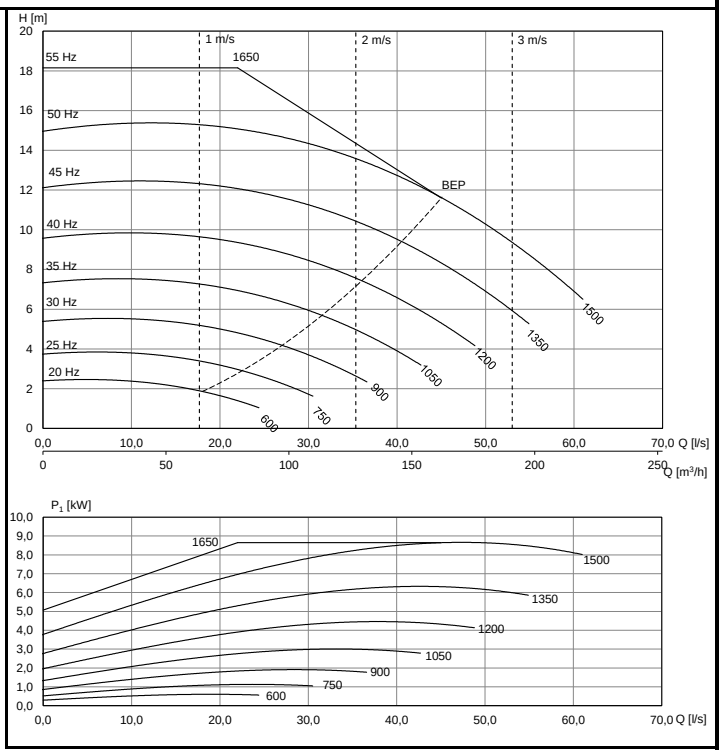

Motor	P_{2N} [kW]	I_N [A] (3x400V)	[kg]
KPVS-134 H2 F31	7,5	20,0	221

TECHNICAL INFORMATION

CIRCULATING PUMPS TO THE HEATING AND COOLING SYSTEMS, INLINE

INLINE PUMPS WITH INTEGRATED SC FREQUENCY CONVERTER, 1X230V

INLINE PUMPS WITH INTEGRATED VS FREQUENCY CONVERTER, 3X400V

Kolmeks

www.kolmeks.com

General technical data

SC-¬ and VS-series of Kolmeks circulation pumps and variable speed controlled centrifugal pumps with integrated frequency converter.

Applications

Cast iron SC- and VS series pumps can be used as circulation, pressure boosting and transfer pumps for clean liquids.

- Bronze SC and VS pumps can be used as domestic hot water, circulation, pressure boosting and transfer pumps for clean , oxygen-rich and some slightly aggressive liquids.
- Stainless steel AISI316 SC and VS pumps can be used as circulation, pressure boosting and transfer pumps for clean and aggressive liquids.

The most common applications of the SC and VS pump series are heating, ventilation, cooling and heat recovery systems, heat exchangers, pressure boosting, district heating plants, ice rinks, swimming pools, spas and industrial processes.

Quick selection chart SC-pumps

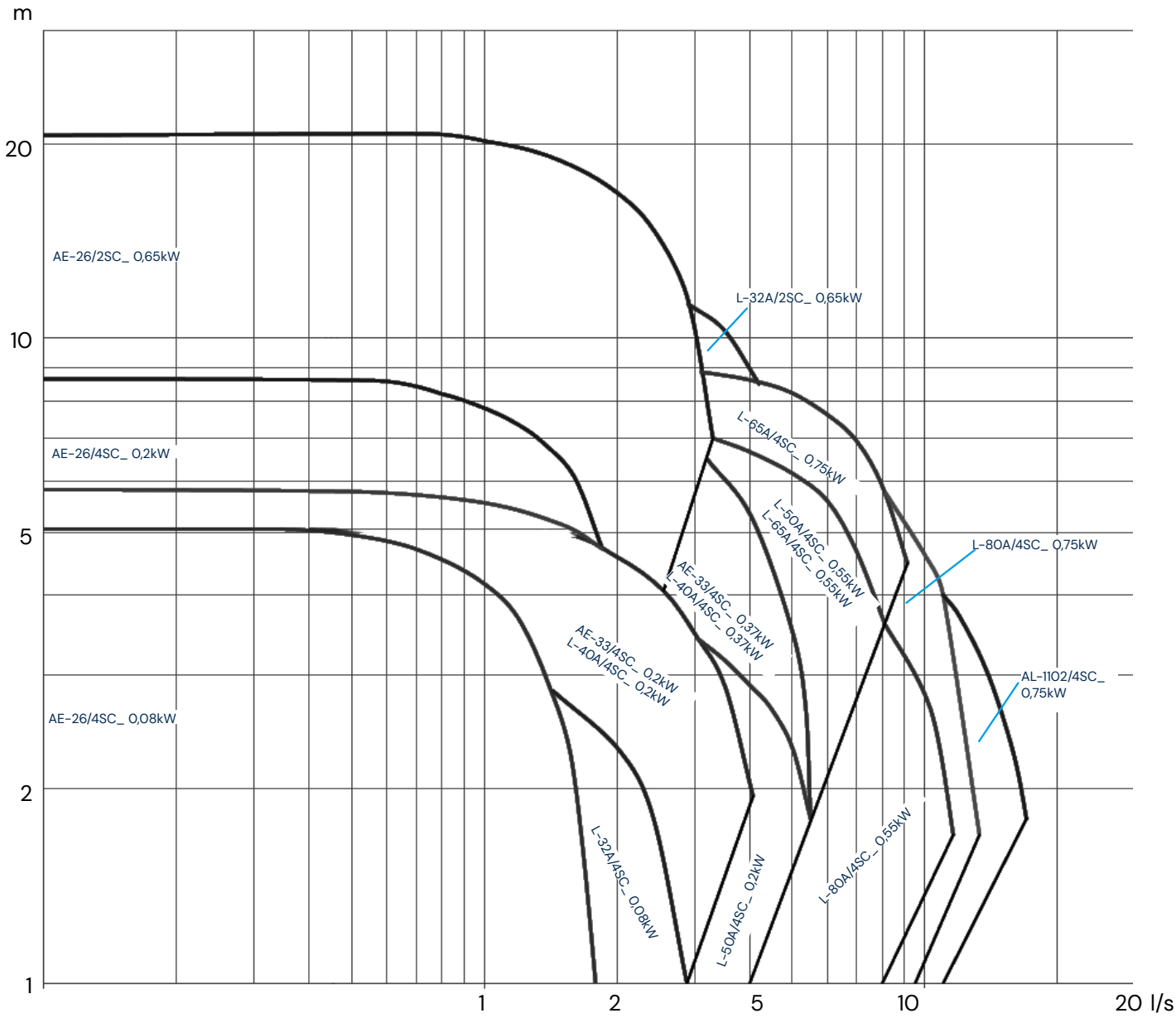

Quick selection chart VS-pumps

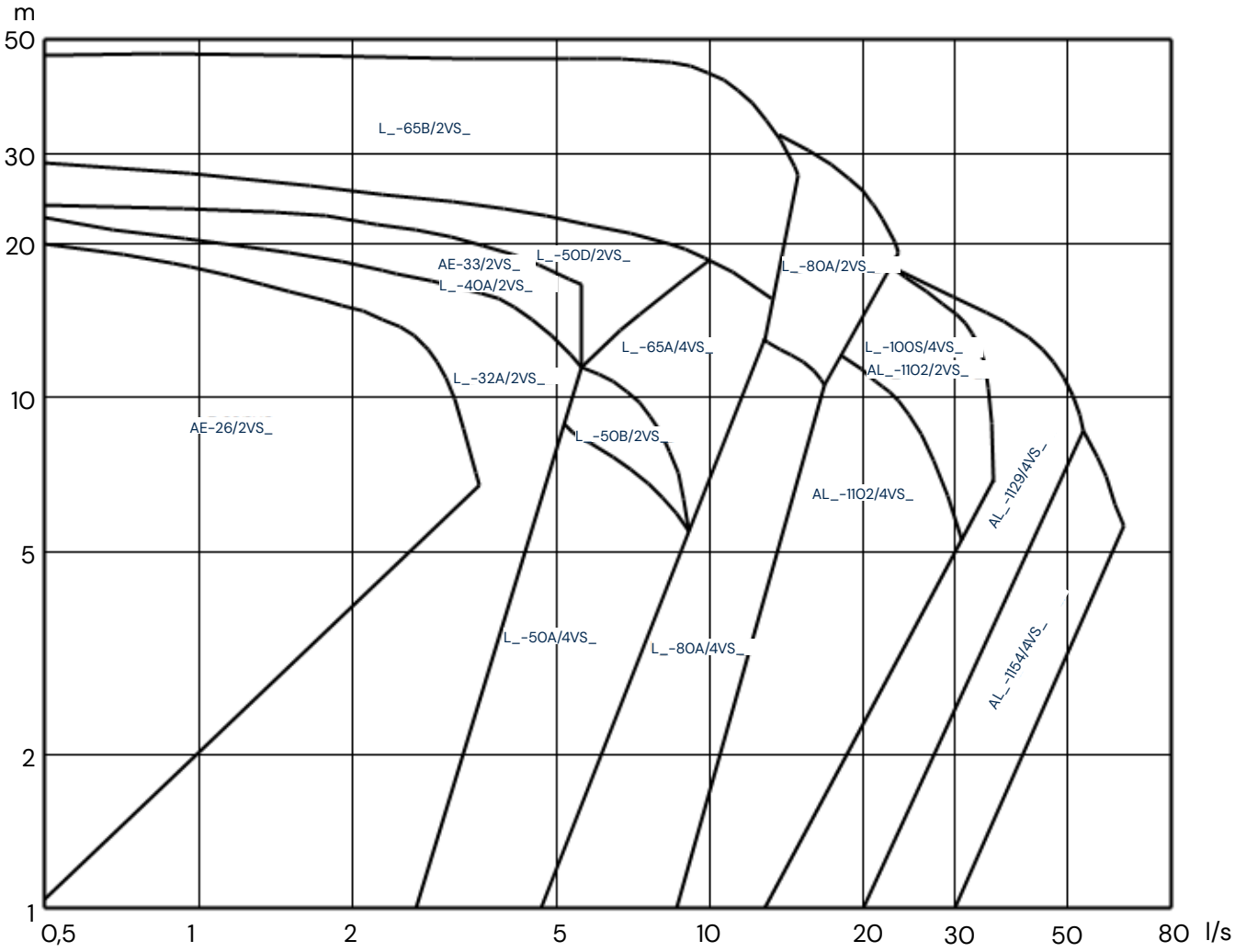

Structure

Pump

SC- and VS-series pumps are monoblock-structured centrifugal pumps with a dry asynchronous motor, which fulfill the requirements of EcoDesign –directive. A frequency converter is integrated into the motor. The pump impeller is installed directly onto the shaft of the electric motor (no separate couplings).

Electric motor

The electric motor of SC- and VS-pump is a three-phase Kolmeks asynchronous motor designed specifically for pump use and frequency converter operation, which guarantees high starting torque and low energy consumption. The electric motor is highly efficient and has low noise levels and fulfills the requirements of EcoDesign –directive.

Supply voltage:	SC: 1 x 230 V, 50 Hz
	VS: 3 x 400 V, 50 Hz
Enclosure class:	IP 54
Insulation class:	F
Duty type:	Continuous duty (S1)
Ambient temperature:	0°C ... +40°C

Connections

Flanged:

The flanges of SC- and VS-pump fit counter-flanges dimensioned according to ISO 7005.

Threaded:

The SC and VS-pump threads are dimensioned according to Standard ISO 228/1.

Seals

The standard shaft seal of an SC- and VS-series pump is a single mechanical seal. The pump housing seal is O-ring or flat gasket. Other seal options are available by request.

Advantages of selecting an SC or VS pump

- The pump is adjusted manually / automatically adjusts its duty to match the requirements of the system
- The duty point, and therefore the electric power consumption, is determined by actual flow requirements, resulting in reduced running and life cycle costs.
- Depending on pump size, the payback period compared to a fixed speed pump is 0.5–2.5 years (see example).

Cost comparison, Q=6l/s, H=35kPa
L-65A/4 0.55kW fixed speed pump
L-65A/4 SCG 0.55kW with integrated frequency converter

Accumulative cost

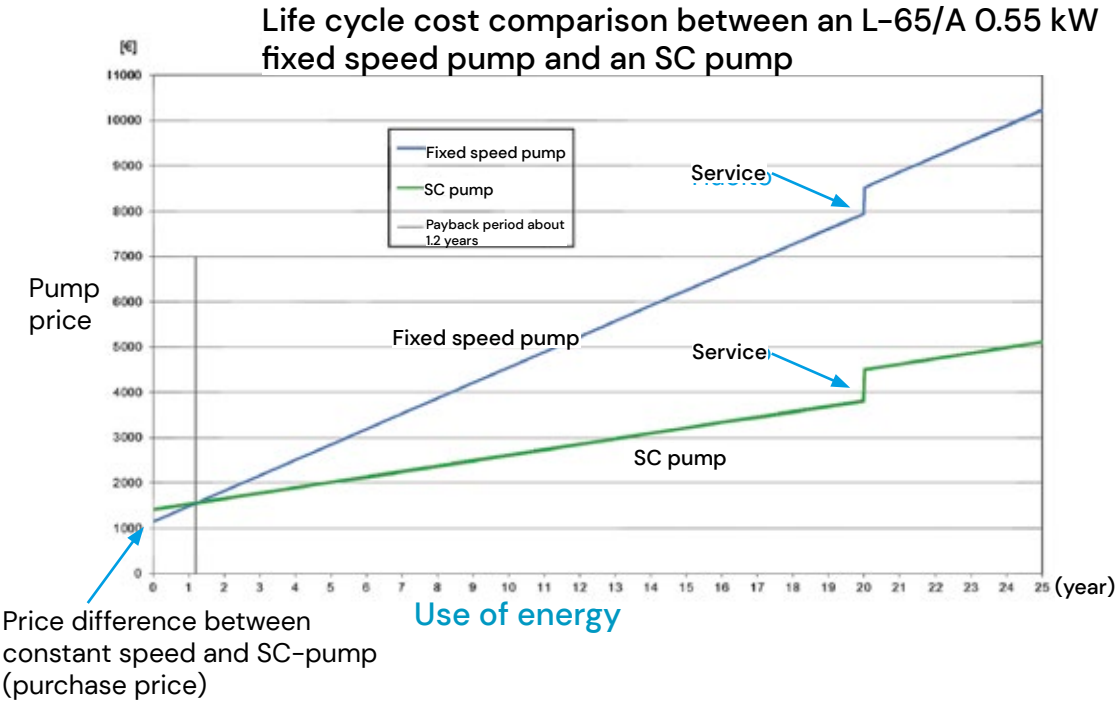

Cost comparison, Q=20l/s, H=113kPa
AL-1102/2 Ø128 4kW fixed speed pump
AL-1102/4 VSC Ø181 3kW 60Hz with integrated frequency converter

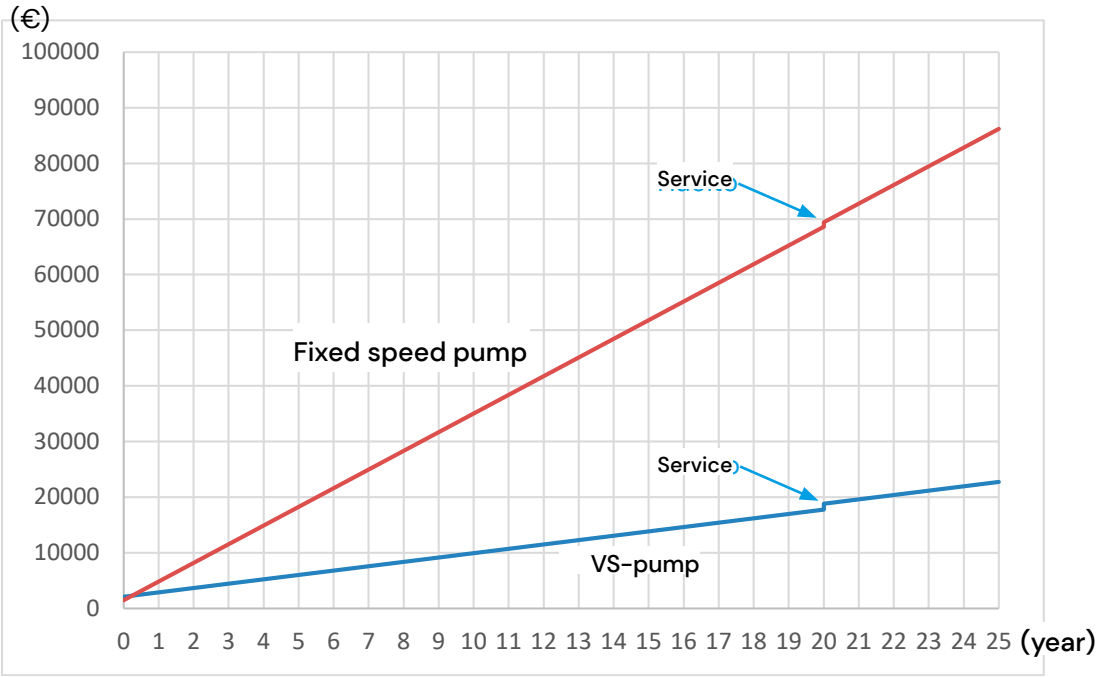

Kolmeks recommendation for pumps in district heating circulation systems

As the payback period for installing a Kolmeks SC variable speed pump is short, Kolmeks recommends the use of variable speed pumps in new systems and the replacement of fixed speed pumps with variable speed pumps in existing systems.

Supply voltage
SC: 1 x 230 V
VS: 3 x 400 V

Advantages of SC- and VS-pumps
- Alarms to BMS
- Duty point can be adjusted in one step
- Operates according to system requirements (radiator and air heating circulation)
- Energy savings
- Reliable operation

District heating system with two secondary circuits

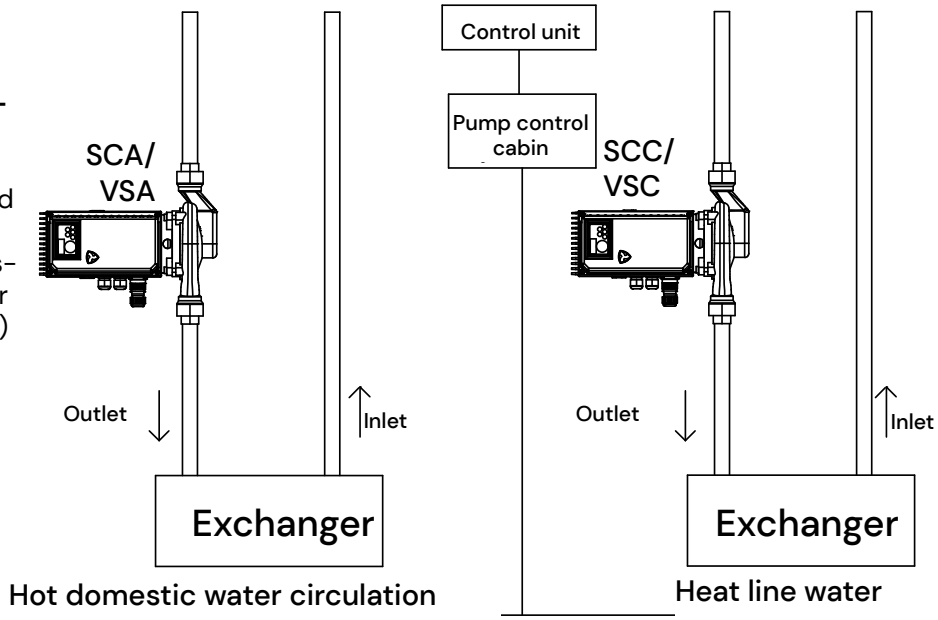

District heating system with three secondary circuits

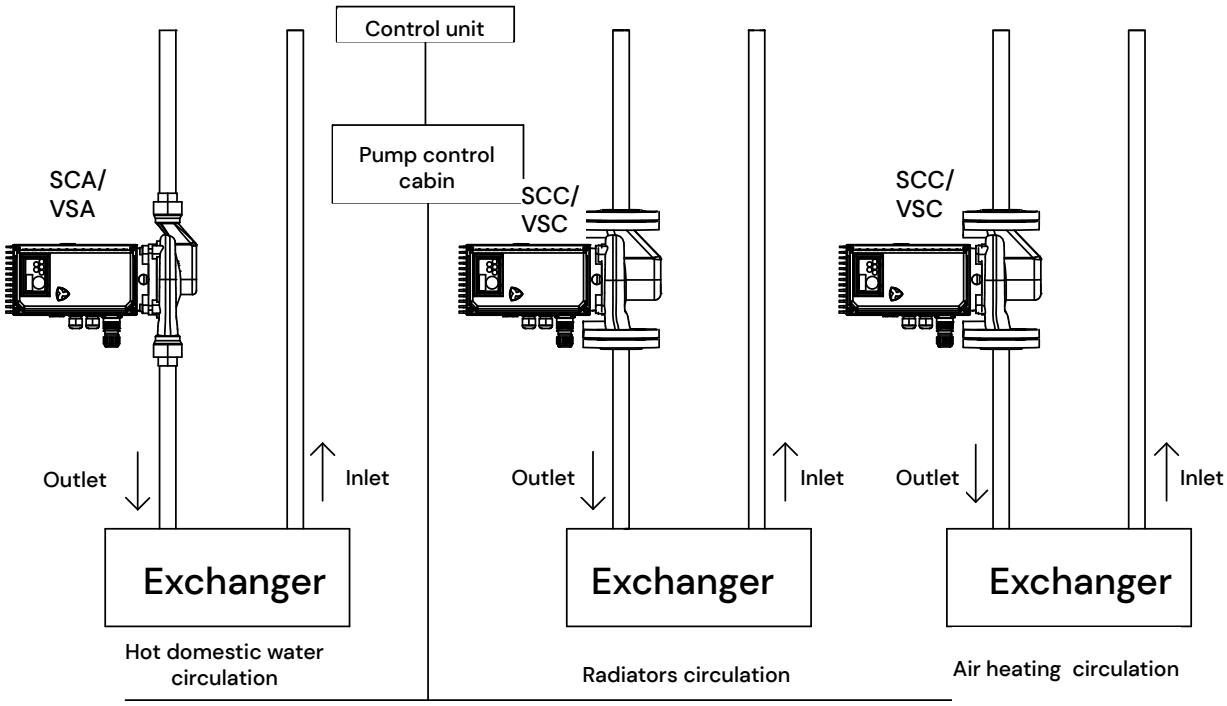

Examples of Kolmeks recommendations for pumps in district heating circulation systems

Standard materials and fields of application for SC pumps

Connection size G or DN	Grey cast iron EN-GJL-200 PN10	Nodular cast iron EN-GJS-400 PN16	Bronze CuSn10Zn2 PN10	Stainless steel AISI 316 PN 16	Shaft seal PN10 Ø [mm] materials	O-ring size [mm]	O-ring material	Motor [kW]
G1	AE-26/4 SC_	-	AEP-26/4 SC_	-	12, carbon/SiC Viton	123 X 2,5	NBR	0,08 and 0,2
	AE-26/2 SC_	-	AEP-26/2 SC_	-	12, carbon/SiC Viton	123 X 2,5	NBR	0,65
G1 1/4	AE-33/4 SC_	-	AEP-33/4 SC_	-	12, carbon/SiC Viton	145 X 2,5	NBR	0,2 and 0,37
DN 32	L-32/4 SC_	-	-	-	12, carbon/SiC EPDM	100 X 2,5	NBR	0,08 and 0,2
	L-32/2 SC_	-	-	-	12, carbon/SiC EPDM	100 X 2,5	NBR	0,65
DN 40	L-40A/4 SC_	-	-	-	12, carbon/SiC EPDM	145 X 2,5	NBR	0,2 and 0,37
DN 50	L-50A/4 SC_	-	LP-50A/4 SC_	-	12, carbon/SiC EPDM	150 X 3	NBR	0,2 and 0,55
DN 65	L-65A/4 SC_	LH-65A/4 SC_	-	-	18, carbon/SiC EPDM	179,3 X 5,7	EPDM	0,55 and 0,75
	-	-	ALP-1066/4 SC_	-	18, carbon/SiC EPDM	179,3 X 5,7	EPDM	0,55 and 0,75
DN 80	L-80A/4 SC_	LH-80A/4 SC_	-	-	18, carbon/SiC EPDM	179,3 X 5,7	EPDM	0,55 and 0,75
DN 100	AL-1102/4 SC_	ALH-1102/4 SC_	ALP-1102/4 SC_	ALS-1102/4 SC_	18, carbon/SiC EPDM	179,3 X 5,7	EPDM	0,75

Operating temperature -15...+95 °C
PN10 = Max. working pressure 10bar, grey cast iron and bronze
PN16 = Max. working pressure 16bar, nodular cast iron and stainless steel

Standard materials and fields of application for VS-pumps

Connection size G or DN	Grey cast iron EN-GJL-200, PN10	Nodular cast iron EN-GJS-400, PN16	Bronze CuSn10Zn2, PN10	Stainless steel AISI 316, PN 16	Shaft seal PN10 Ø [mm] materials	O-ring size [mm]	O-ring material	Motor [kW]
G1	AE-26/2 VS	-	AEP-26/2 VS	-	12, carbon/SiC Viton	123 X 2,5	NBR	0,65
G1 1/4	AE-33/2 VS	-	AEP-33/2 VS	-	12, carbon/SiC Viton	145 X 2,5	NBR	1,1 and 1,5
DN 32	L-32A/2 VS	-	-	-	12, carbon/SiC EPDM	100 X 2,5	NBR	0,65 and 1,1
DN 40	L-40A/2 VS	-	-	-	12, carbon/SiC EPDM	145 X 2,5	NBR	1,1 and 1,5
DN 50	L-50A/4 VS	-	LP-50A/4 VS	-	12, carbon/SiC EPDM	150 X 3	NBR	0,55 and 0,9
	L-50B/2 VS	-	LP-50B/2 VS	-	12, carbon/SiC EPDM	150 X 3	NBR	1,1
	L-50D/2 VS	LH-50D/2 VS	LP-50D/2 VS	-	18, carbon/SiC EPDM	150 X 3	NBR	2,2 and 3
DN 65	L-65A/4 VS	LH-65A/4 VS	-	-	18, carbon/SiC EPDM	179,3 X 5,7	EPDM	0,55, 0,9, 1,5, 2,2 and 3
	-	-	ALP-1066/4 VS	-	18, carbon/SiC EPDM	179,3 X 5,7	EPDM	0,55, 0,9, 1,5, 2,2 and 3
	L-65B/2 VS	LH-65B/2 VS	-	LS-65B/2 VS	18, carbon/SiC EPDM	179,3 X 5,7	EPDM	3, 4, 5,5 and 7,5
	-	-	ALP-1065/2 VS	-	18, carbon/SiC EPDM	179,3 X 5,7	EPDM	3, 4, 5,5 and 7,5
DN 80	L-80A/4 VS	LH-80A/4 VS	-	-	18, carbon/SiC EPDM	179,3 X 5,7	EPDM	0,75, 1,5 2,2 and 3
	L-80A/2 VS	LH-80A/2 VS	-	-	18, carbon/SiC EPDM	179,3 X 5,7	EPDM	4, 5,5 and 7,5
DN 100	AL-1102/4 VS	ALH-1102/4 VS	ALP-1102/4 VS	ALS-1102/4 VS	18, carbon/SiC EPDM	179,3 X 5,7	EPDM	0,75, 1,5, 2,2 and 3
	AL-1102/2 VS	ALH-1102/2 VS	ALP-1102/2 VS	ALS-1102/2 VS	18, carbon/SiC EPDM	179,3 X 5,7	EPDM	4, 5,5 and 7,5
	L-100S/4 VS	LH-100S/4 VS	-	-	32, carbon/SiC EPDM	315 x 6,3	EPDM	4, 5,5 and 7,5
DN 125	-	-	ALP-1128/4 VS	-	32, carbon/SiC EPDM	309/295X1	gasket	4, 5,5 and 7,5
	AL-1129/4 VS	ALH-1129/4 VS	-	ALS-1129/4 VS	32, carbon/SiC EPDM	309/295X1	gasket	4, 5,5 and 7,5
DN 150	-	-	ALP-1153/4 VS	-	32, carbon/SiC EPDM	309/295X1	gasket	7,5
	AL-1154/4 VS	ALH-1154/4 VS	-	ALS-1154/4 VS	32, carbon/SiC EPDM	309/295X1	gasket	7,5

Operating temperature -15...+95 °C
PN10 = Max. working pressure 10bar, grey cast iron and bronze
PN16 = Max. working pressure 16bar, nodular cast iron and stainless steel

Shaft seal

The standard shaft seal of an VS-series pump is a single mechanical seal. The pump housing seal is O-ring or a gasket. Other seal options are available by request.

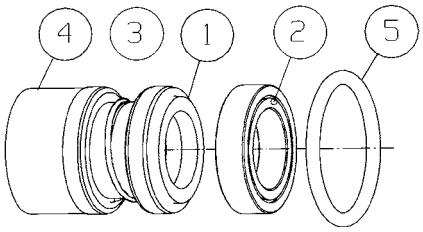

Part of single mechanical shaft seal
1 Rotating ring
2 Stationary ring
3 Body/bellows
4 Spring
5 O-ring

Rating plate information

Rating plate

Additional accessories:
T = Seal for aggressive liquids (external)
H = Flushing
KT = Double mechanical seal
Sn = Non-standard mechanical seal
Kn = Non-standard surface treatment

Special impeller material:
PM = Bronze
SS = stainless steel AISI316

Pump type
Serial number, Pressure class
Duty point, Max liquid temperature
Motor type
Nominal voltage and current
Rotation speed, insulating and enclosure class
Manufacturer, Country of origin

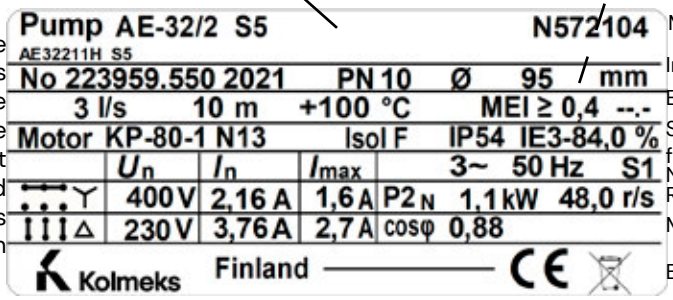

Motor code marking
Impeller size
Electrical power at duty point
Supply voltage phase number
frequency and duty type
Nominal shaft power
Rotation speed range
Minimum efficiency index (MEI)
Bearing types, CE marking

1 2 3 4 5

AL - 110 2 / 4 VS B
L P - 50 A / 4 SC C

1) Pump series:
AE-, L-, AL-

2) Material of housing, sealing flange and impeller:
no letter = Grey cast iron EN-GJL-200
H = Nodular cast iron EN-GJS-400
P = Bronze CuSn10Zn2
S = Stainless steel AISI 316

3) Flange DN size:
26 = 1"
33 = 1 1/4"
32 = DN 32
40 = DN 40
50 = DN 50
65 = DN 65
106 = DN 65
80 = DN 80
110 = DN 100
112 = DN 125
115 = DN 150

4) Electric motor pole number:
2 = rotation speed 50 r/s (50 Hz)
4 = rotation speed 25 r/s (50 Hz)
rotation speed 30 r/s (60 Hz)
rotation speed 32.5 r/s (65 Hz)

5) SC = SC frequency converter integrated in pump.
VS = VS frequency converter integrated in pump:
Pump adjustment method
SCA/VSA, SCB/VSB, SCC/VSC, SCD/VSD, SCF/VSF, SCG/VSG, SCM/VSM

Pump installation

The pump can be installed in the piping without additional support up to 3kW. 4kW and above must be installed with base plate to the vertical position. The position of the motor unit and therefore the location of the frequency converter box can be changed by detaching the motor unit from the pump housing and turning it to the required position, within certain limitations.

Ensure the following when installing the pump:

- Enough room for control, service and inspections
- The installation position should be chosen such that the display is readable; a separate control panel can be used if required.
- Possibility to use lifting and transfer devices if required
- Shut-off valves on both sides of the pump
- The pump must be installed in such a position that the frequency converter of the pump is not in the immediate vicinity of a hot pipe.

Operating positions

Permitted operating positions

Prohibited operating positions

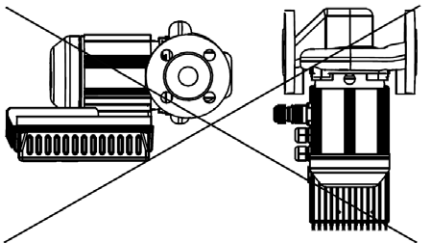

Recommended general limits without the base

Size	Power
DN 15 ... 50	max. 2,2 kW
DN 65	4 kW
DN 80	4 kW
DN 100	7,5 kW
DN 125	7,5 kW

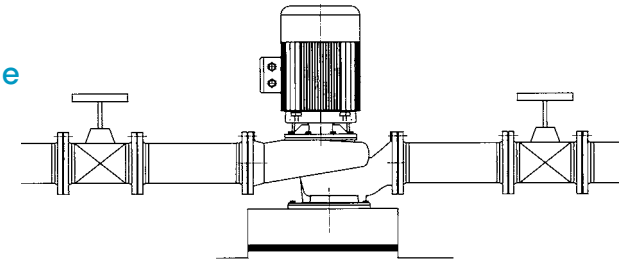

Large pumps are fastened by their base plate onto a freely moving concrete plinth, which is to be separated from the floor by a 20-mm thick rubber or cork mat. The weight of the concrete base must be about 1.5 times the weight og the pump.

Drive unit

Exchange unit SCA/VSB-, SCC/VSC-, SCD/VSD- and SCF/VSF-pump

The complete pump motor unit is a new spare motor unit which includes:

- Electric motor
- Frequency converter
- Transmitter quick connection plug with wires
- Sealing flange
- Impeller
- Seals

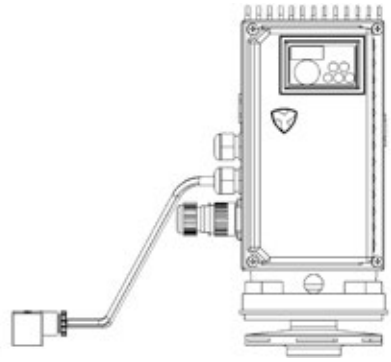
connection plug

When replacing the drive unit, no piping or electrical work is required, as there is no need to detach the pump housing, and the power supply is connected using a quick connection plug. There is also no need to detach the transmitter or its tubes. Only the cap screw of the plug connector at the top of the transmitter is opened, which enables the plug connector and its wiring to be pulled out. In the new drive unit, the connection plug is pre-wired, which allows quick replacement of the transmitter electrical connection.

Drive unit SCA/VSA- and SCG/VSG-pump

The complete pump motor unit is a new spare motor unit which includes:

- Electric motor
- Frequency converter
- Sealing flange
- Impeller
- Seals

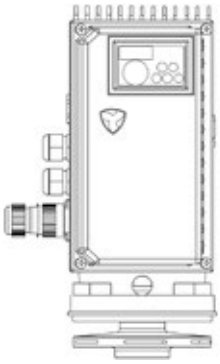

When the drive unit is changed, there is no need for piping work or electrical installations. When changing the VS –drive unit, electrical wiring installation is needed due to fixed mains supply connection.

Control methods and control connections

SC pump I/Os (inputs and outputs)

Terminal 4	Programmable 4-20 mA, 0–5 VDC, 0–10 VDC analog input (voltage/current selection switch)
Terminal 2	Programmable 0–10 VDC, 0–5 VDC analog input
Terminals STF, STR, RH, RM, RL	Programmable digital inputs
Terminal PC	24 VDC voltage supply for digital inputs and feedback transmitter (max. 100 mA)
Terminal 10	5 VDC voltage supply for potentiometer
Terminal 5	Signal ground
AM / 5	Programmable analog output
Relay output, Terminals A,B, C	Fault indication (programmable relay output), potential free change-over contacts max. 230 VAC / 0.3 A, cos fii 0.4, max. 30 VAC / 0.3 A
Transistor output, Terminals RUN, SE	Load 27 V / 0.1 A, voltage loss 3.4 V

Terminal factory settings

Terminal 4	Programmed as feedback input 4–20 mA or not in use depending on the pump control method
Terminal 2	0–10 VDC direct speed reference or controller reference depending on control method used, or not in use.
Terminal STF	Jumper between terminals PC–STF open/closed = pump off/on (In SCB- and SCC –pumps the external switch for pump on/off is connected between terminal 8 of the additional measument card and terminal STF.)
Terminal STR	Not in use
Terminal RH	Dry running protection in the SCD version
Terminal RM	Jogging operation. PC – RM open/closed = normal operation / runs forced at 40 Hz frequency.
AM / 5	Analog output 0–10 VDC. SCCVAK (direct speed reference from automation) and in SCG versions programmed as frequency. SCB, SCC, SCCVAK (differential pressure reference from automation), in SCD and SCF version programmed as feedback.
Relay output, Terminals A,B ja C	The relay output is programmed with fault information. The relay draws: Terminals A and C connected, when the pump runs or voltage is connected to it. Terminals B and C connected, when the device is in fault mode or dead.

VS-pump terminal factory settings

Terminal		Signal	Kolmeks Factory Defaul
A	RS485	Serial -	
B	RS485	Serial +	
1	+10Vref	+10 V reference voltage	
2	AI1+	Analogue input 1 voltage or current	A-, B- and C-versions: Current (SW 2 + P3.1) D- and G-versions: Voltage (SW2 + P.3.1)
3	AI1-/GND	AI1-	
6	24Vout	+24 V, loadability 100mA	
7	DIN COM	Digital input common	
8	DI1	Digital input 1	Run / Stop (P4.1 - P4.18) *
9	DI2	Digital input 2	PID-Controller (P4.1 - P4.18) *
10	DI3	Digital input 3	Preset speed, 40 Hz (P4.1 - P4.18) *
4	AI2+	Analogue input 2 voltage or current	Current (SW 3 + P3.5)
5	AI2-/GND	AI2-	
13	DO1-	Digital output -	
14	DI4	Digital input 4	Not in use(P4.1 - P4.18) *
15	DI5	Digital input 5	Fault reset (P4.1 - P4.18) *
16	DI6	Digital input 6	NC External fault (P4.1 - P4.18) *
18	AO1+	Analogue output	Output Frequency 0 - f_{max} , 0 - 10V (P6.1)
20	DO1+	Digital output +	Not in use
*) Parameter group 4 operations are activated by choosing digital inputs with parameters 4.1 - 4.18			

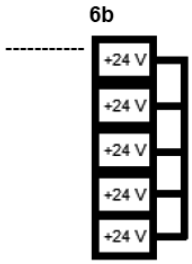

22	RO1/2	Relay output 1	Run
23	RO1/3		
24	RO2/1	Relay output 2	Fault
25	RO2/2		
26	RO2/3		

Dip switch	Operation	Factory Default
SW 1	Digital input COM (terminal 7) can be isolated from GND by setting SW1 to position "1"	SW1 = 0
SW 2	Analogue input 1 operation mode selection either to current or voltage. When the switch is in position "0", AI1 operates as current input (0/4-20 mA). When the switch is in position "1", AI1 operates as voltage input(0-10V)	SW2 = 0 A,- B- and C-versions SW2 = 1 D- and G-versions
SW 3	Analogue input 2 operation mode selection either to current or voltage. When the switch is in position "0", AI2 operates as current input (0/4-20 mA). When the switch is in position "1", AI2 operates as voltage input(0-10V)	SW3 = 0
SW 4	The Switch SW4 is related to RS485 connection, It´s used for bus termination. The bus termination must be set to the first an last device on the network. The switch SW4 in position "0" means that termination resistance is connected and the termination of the bus has been set. If the VS-pump is the last device on the net, this switch must be set to "0" position.	SW4 = 0

SCA- / VSA-pump: Direct speed reference by potentiometer

Applications

For systems with no continuous automatic adjustment requirement and a constant duty point, such as domestic hot water circulation systems, for example.

Accessories

Pump and frequency converter.

Operating principle

The rotation speed of the pump is set in one step using the buttons on the frequency converter when commissioning the pump.

Pump curve

The pump QH curve equals the QH curve of a standard speed pump.

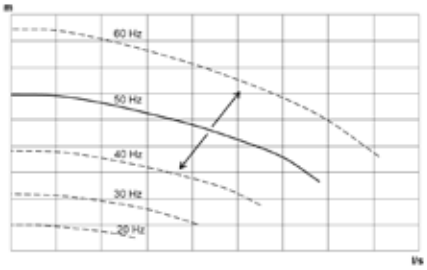

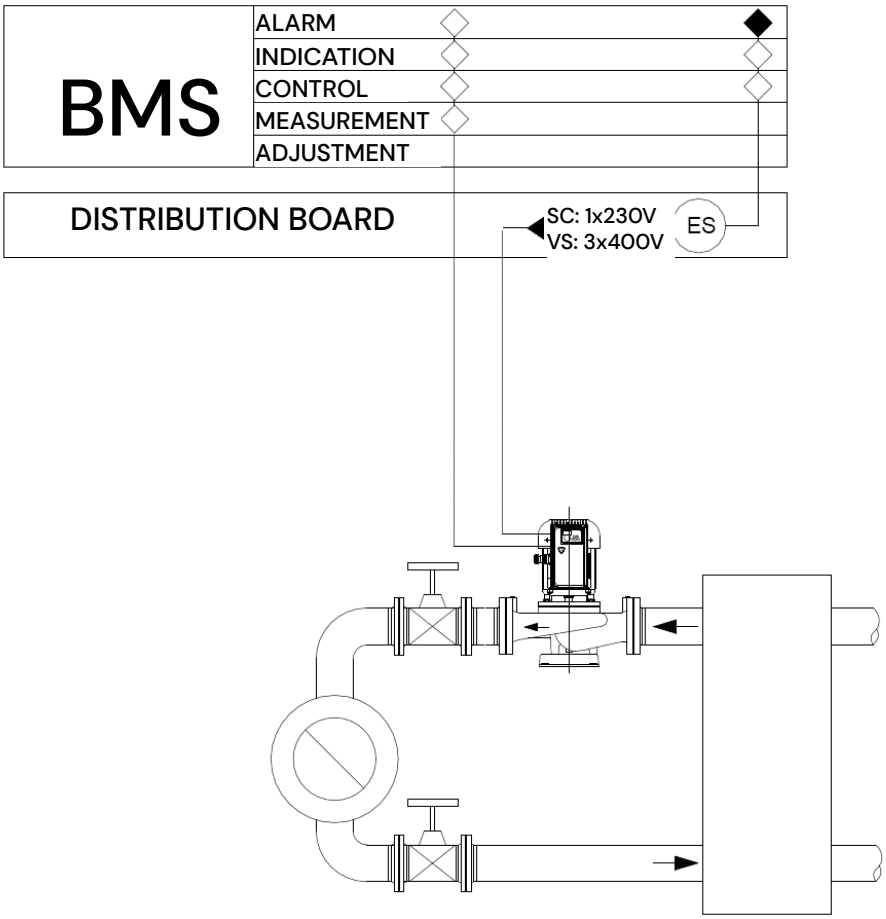

SCB- / VSB-pump: Constant differential pressure across pump

Applications

For circulation systems where flow rates vary and the majority of pressure loss is created at consumption targets. For example, heating and cooling systems and pressure boosting in parallel circulation systems.

Accessories

Pump, frequency converter, differential pressure transmitter and measurement pipes installed in the suction and discharge flanges of the pump. The higher pressure transmitter cable is marked with the black tube. The lower pressure transmitter has no markings.

Operating principle and system adjustment

The differential constant pressure is maintained between the pump flanges, which is set up with the buttons of the frequency converter.

Pump curve

The QH curve of the pump is horizontal, which is applicable for circulation systems where the pressure loss of the heat source is low in relation to the total pressure loss.

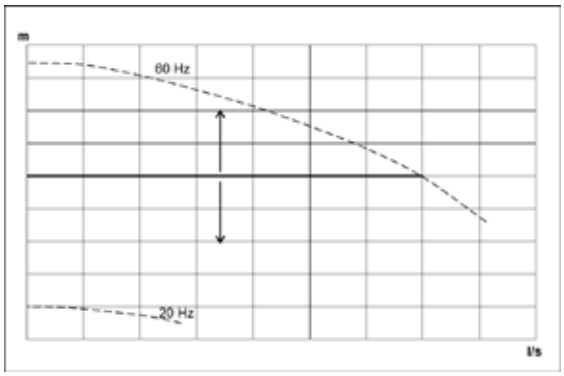

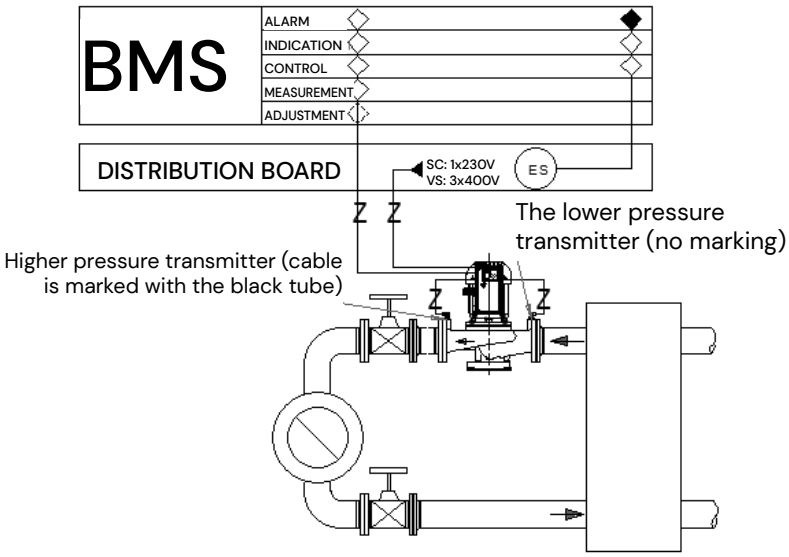

PUMP IN SUPPLY

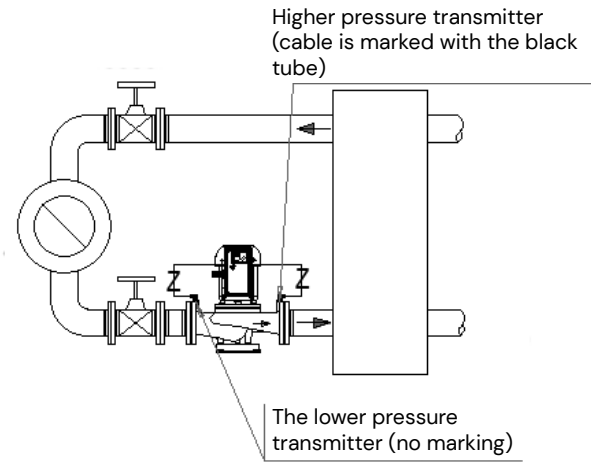

PUMP IN RETURN

SCC- / VSC-pump: Constant differential pressure in piping

Applications

For circulation systems where flow rates vary significantly and the majority of pressure loss is created at consumption targets. For example, heating and cooling systems and pressure boosting in parallel circulation systems.

Accessories

Pump, frequency converter, differential pressure transmitter with pipes, one of which is installed in the suction or pressure flange in the pump and the other in the system's inlet or outlet pipe. The higher pressure transmitter cable is marked with the black tube. The lower pressure transmitter has no markings.

Operating principle and system adjustment

The differential constant pressure is maintained between the supply and return pipes, which is set up with the buttons of the frequency converter

Pump curve

The pump QH curve is automatically square. The shape of the QH curve depends on the relation of the heat source pressure loss to the total pressure loss of the circulation system. The larger the share of the heat exchanger pressure loss is in relation to the circulation system's total pressure loss, the steeper the QH curve is.

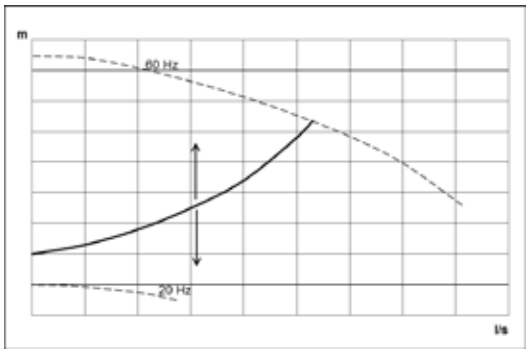

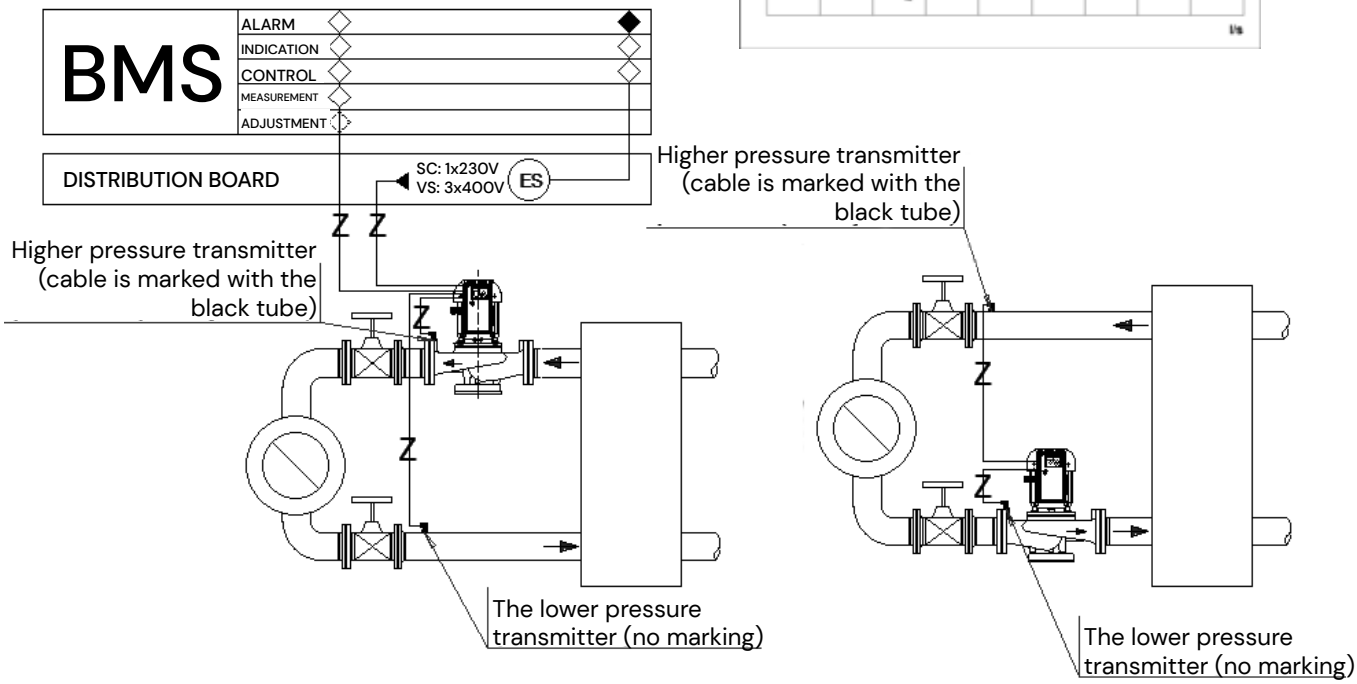

PUMP IN SUPPLY

PUMP IN RETURN

SCCVAK- / VSCVAK-pump: Constant differential pressure in piping by frequency converter PI-controller

Operating principle

Constant differential pressure is maintained over the inlet and outlet line of the system by setting it in the BMS (differential pressure reference value as voltage current signal 0–10 V). TThese connections and operation are the same as for the SCC- / VSC-pump.

NOTE! If the BMS is not operational when pumping is required, set the differential pressure with the buttons of the frequency converter.

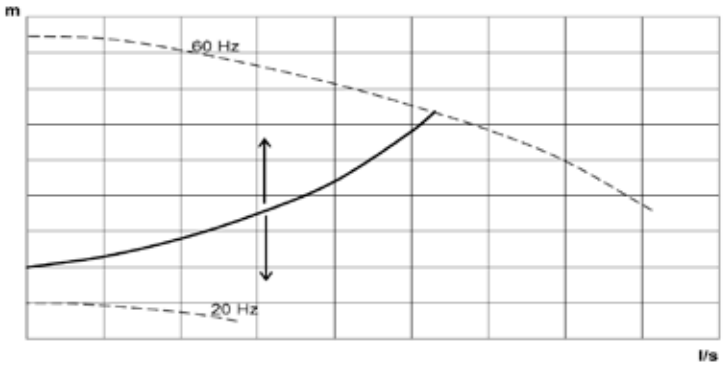

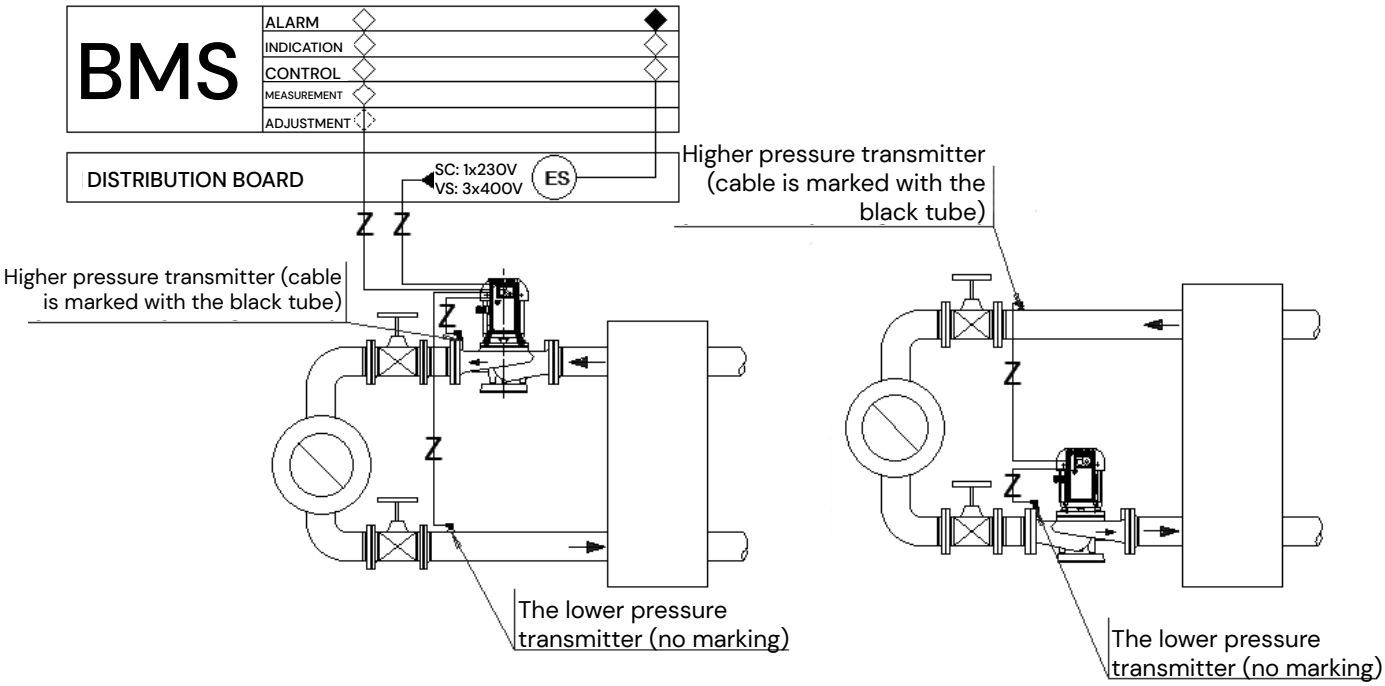

PUMP IN SUPPLY

PUMP IN RETURN

SCD / VSD-pump: Constant pressure in discharge flange (pressure boosting)

Applications

For pressure boosting and other open systems which require a constant pressure.

Accessories

Pump, frequency converter and pressure transmitter which is installed either on the pump discharge flange or consumption point.

Operating principle

The constant discharge pressure is maintained, which is set up with the buttons of the frequency converter

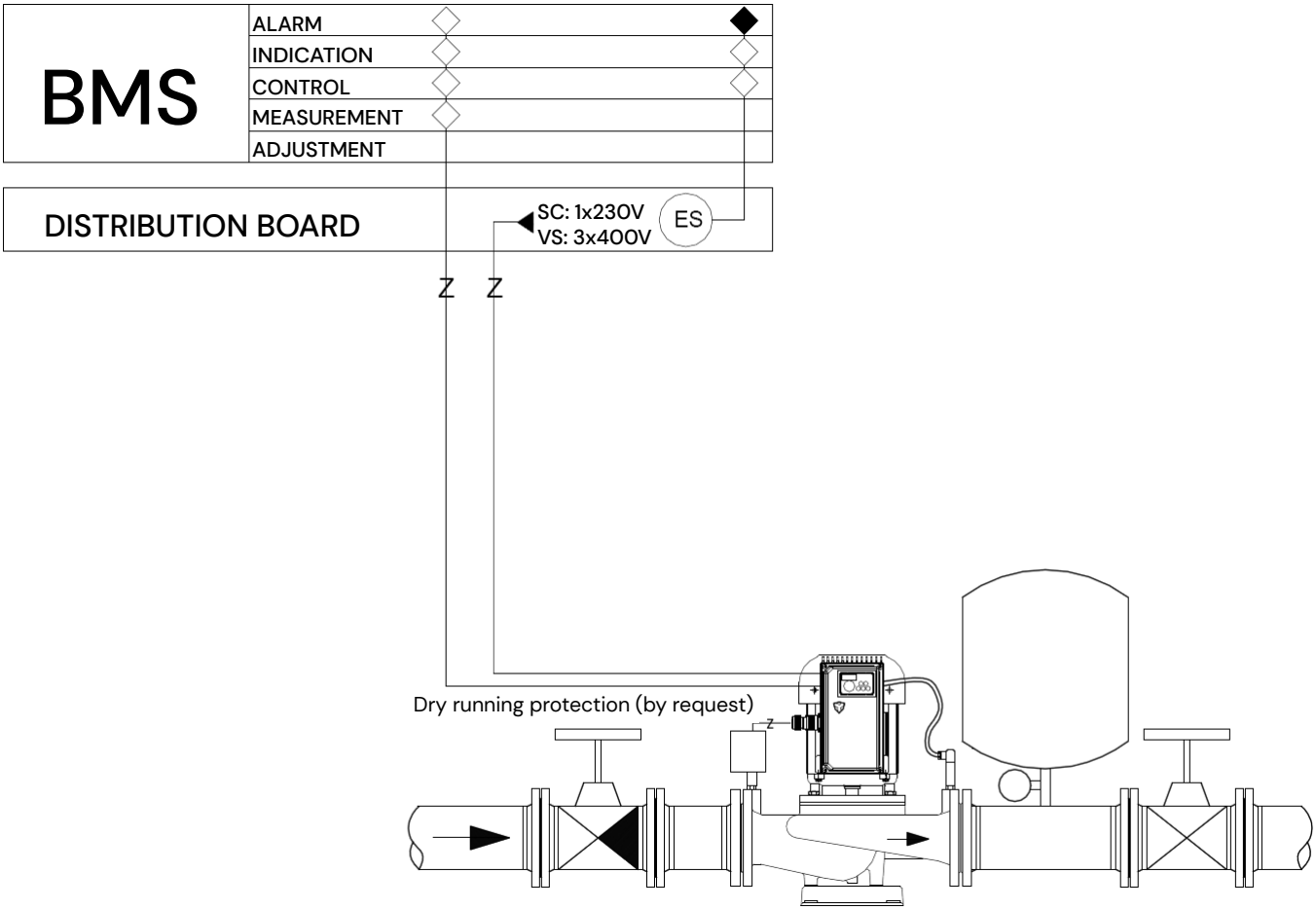

SCF- / VSF-pump: Constant temperature

Applications
For heating or cooling systems which maintain constant temperature by adjusting the flow rate.

Accessories
Pump, frequency converter and temperature transmitter.

Operating principle
The constant temperature is maintained, which is set up with the buttons of the frequency converter.

NOTE! Regulation mode is needed when ordering the pump. NORMAL: Speed decreases when feedback higher that reference (heating system). INVERSE: Speed increases when feedbch higher that reference (cooling system).

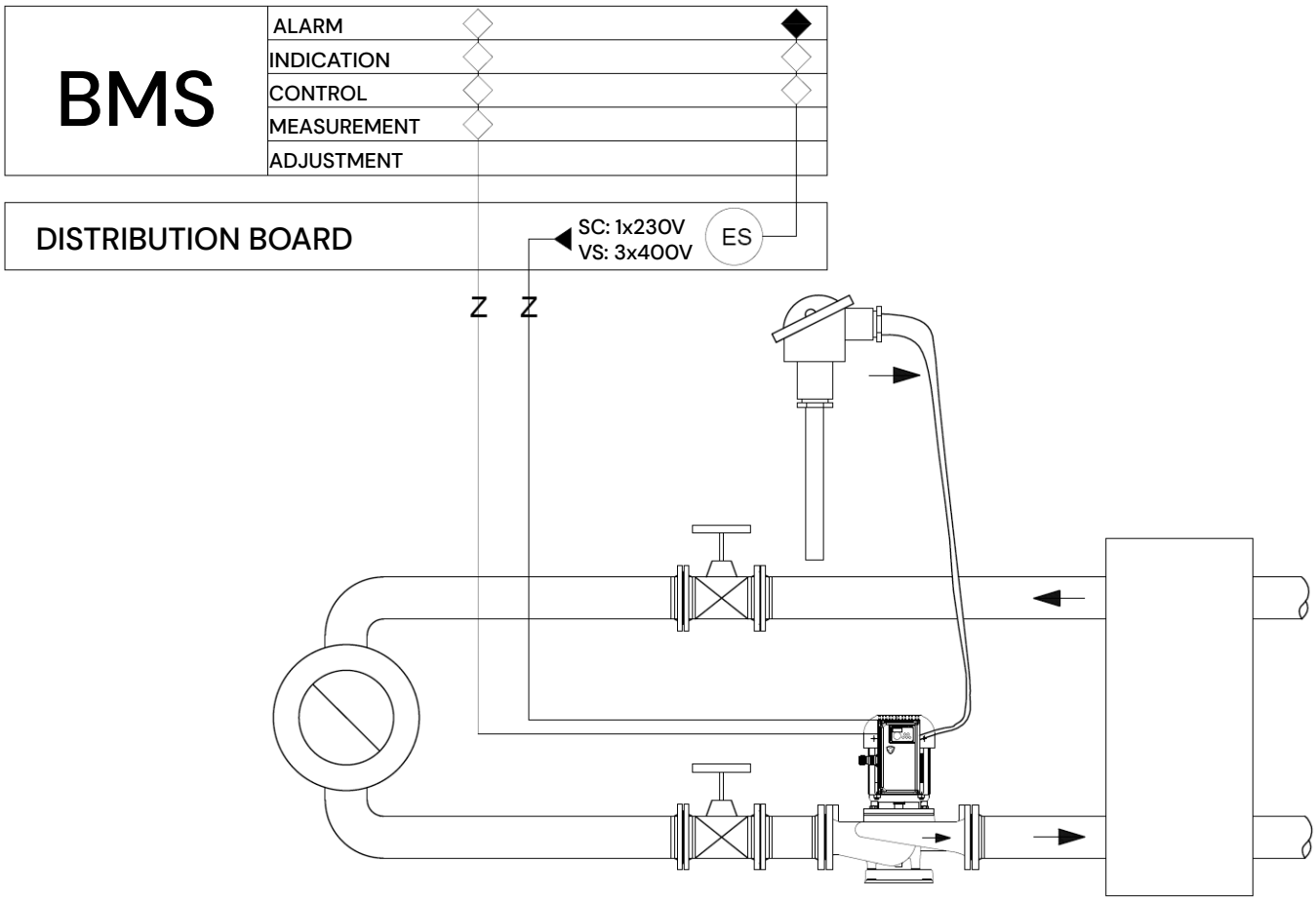

SCG- / VSG-pump: Pump speed controlled by external automation

For systems with varying flow rates and/or in which the flow rate is adjusted using the pump. The pump is controlled centrally or by a separate controller.

Accessories

Pump and frequency converter.

Operating principle

The pump is given a direct speed reference externally e.g. from the BMS, a separate controller, process control, etc.

NOTE! If the BMS is not operational when pumping is required, the standard speed of the pump can be set in the same way as for an SCA-/VSA- pump.

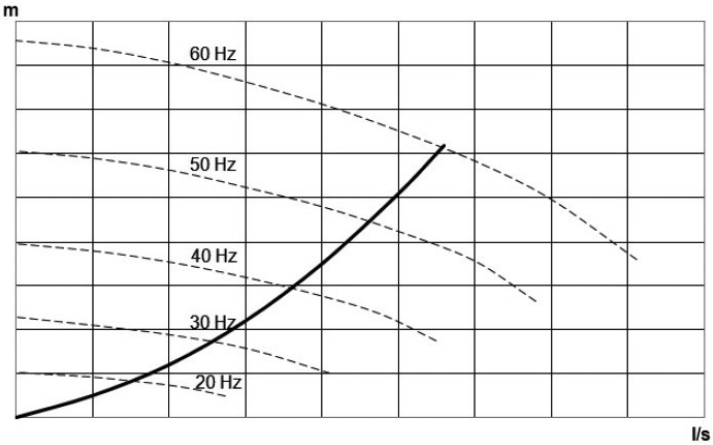

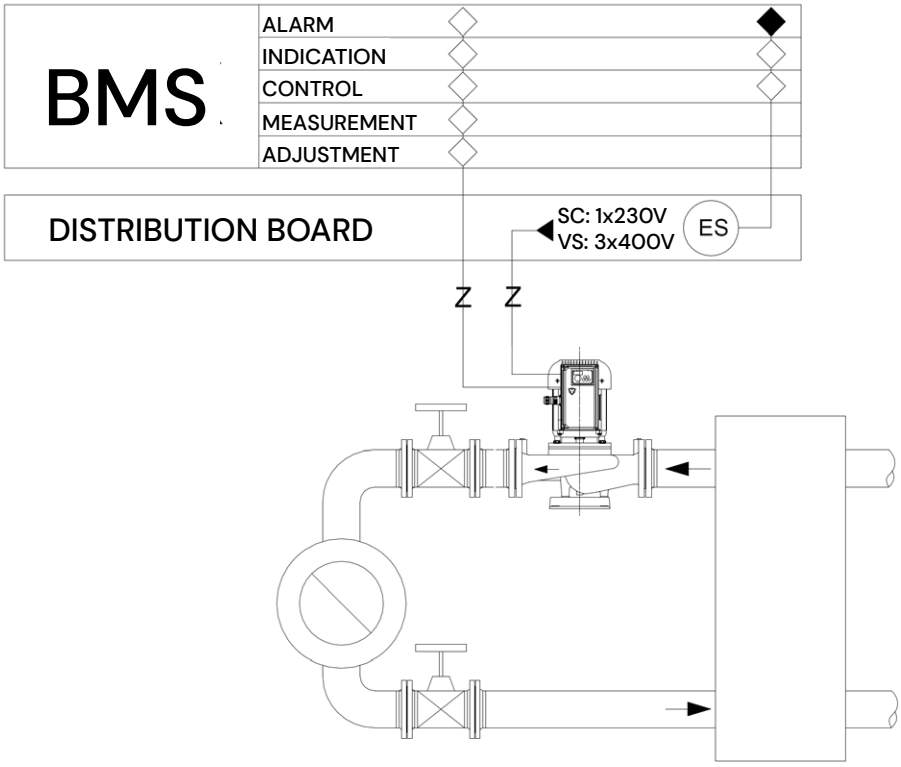

SCM- / VSM-pump: Automation controlled pump with MODBUS RTU bus

For systems with varying flow rates and/or in which the flow rate is adjusted by the pump. The pump is controlled centrally or by a separate controller.

Accessories

Pump and frequency converter.

Operating principle

The adjustment, control, measurement, indication and alarms of the pump frequency converter is carried out externally using building automation, process control, or by means of MODBUS RTU bus functions.

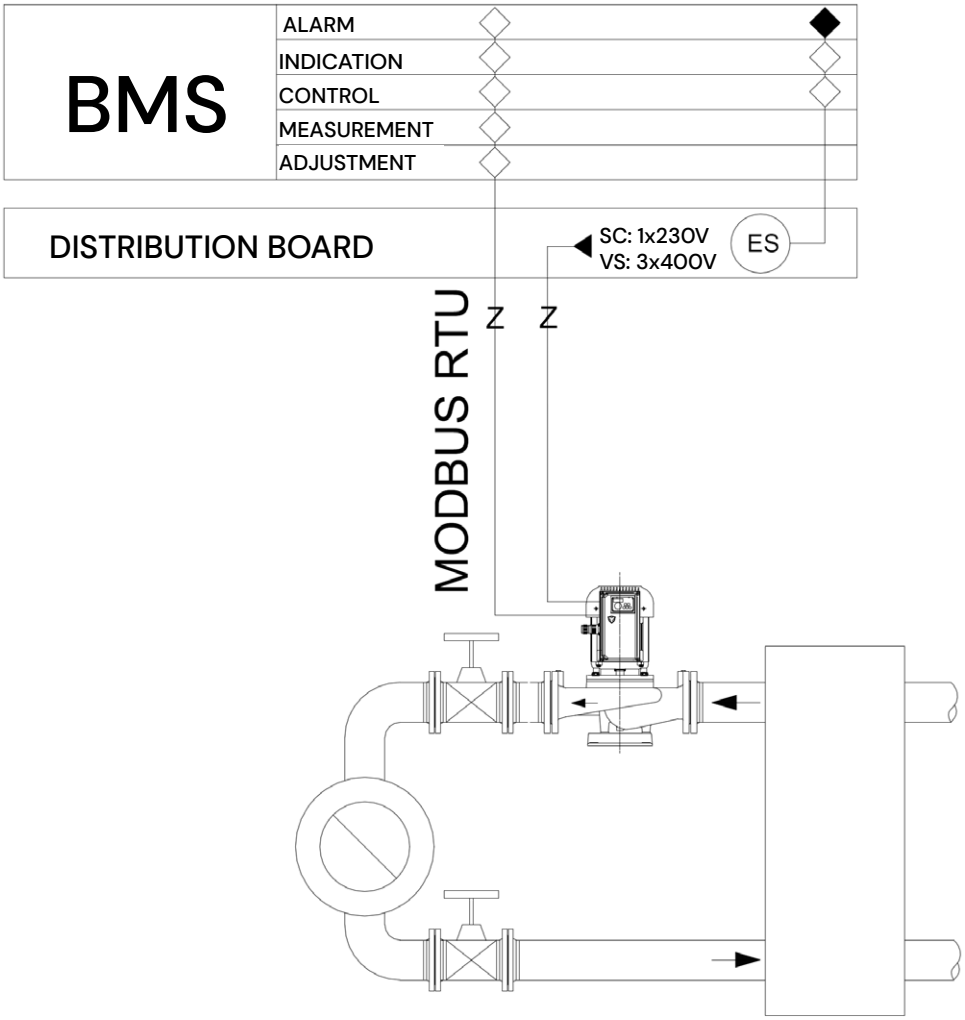

NOTE! The following seriel bus connection option cards are available for VS –pumps by request: Lonworks, Profibus DP, CAnopen, Devicenet MODBUS TCP, Profinet ja Ethernet IP.

Pump parts

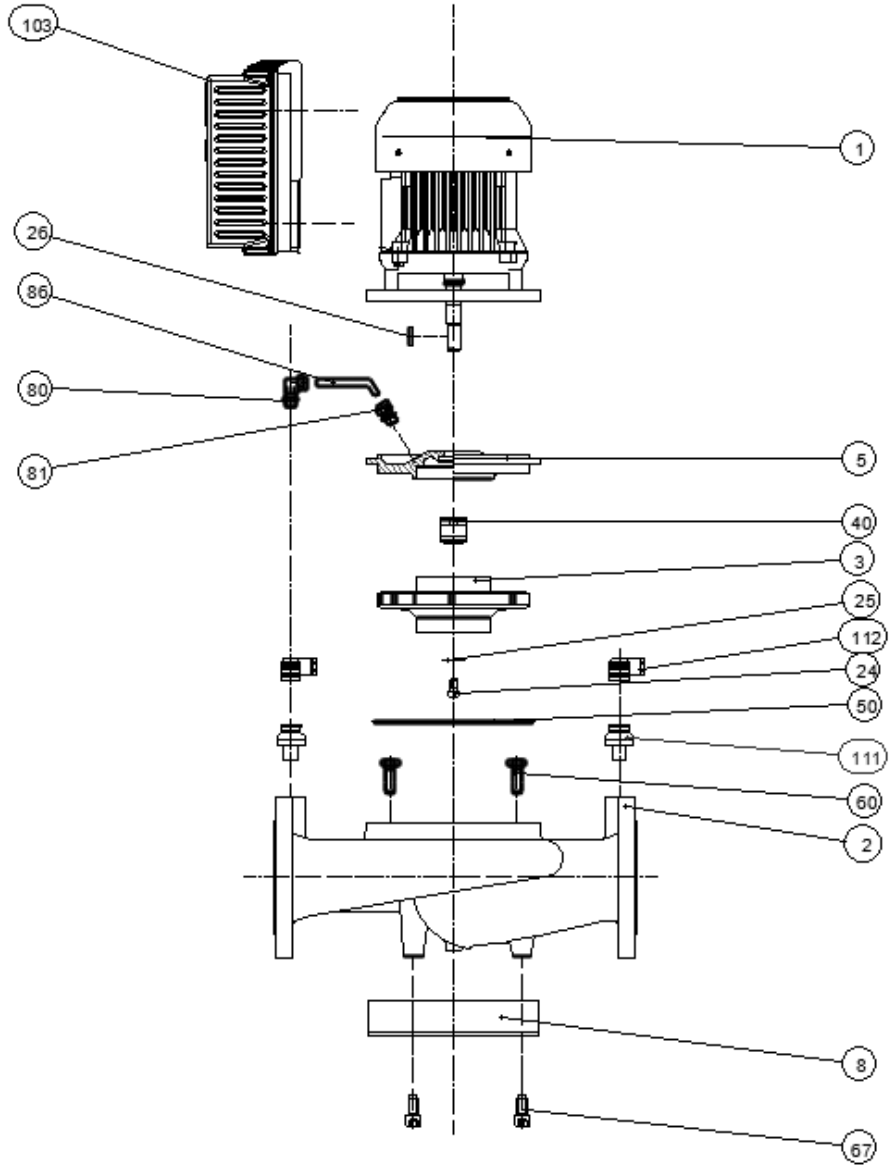

1 Electric motor
2 Pump housing
3 Impeller
5 Sealing flange
8 Base plate
24 Screw or nut
25 Washer
26 Key
40 Shaft seal
50 Housing O-ring
60 Nut / Screw
67 Screw
80 Pipe union (LH and ALH series)
81 Pipe union (LH and ALH series)
86 Pipe (LH and ALH series)
103 Frequency converter
111 Fixing plate (SCB, SCC)
112 Pipe joints (SCB, SCC)

When ordering spare parts, please state the pump type, serial number, duty point, impeller size, electric motor type and power. These can be found on the rating plate.

Reading curves:

Characteristic curves apply to +20°C water. Liquids whose viscosity differs from that of water must be taken into account when dimensioning the pump. Please contact Kolmeks for further information.

Thread or flange size | Pump type | Rotation speed range | Impeller size | Supply voltage | Flow speed in pump flanges

L-50A/4 SC	LP-50A/4 SC			
DN 50	600 - 1800 r/min	Ø 135 mm	1~ 230 V	

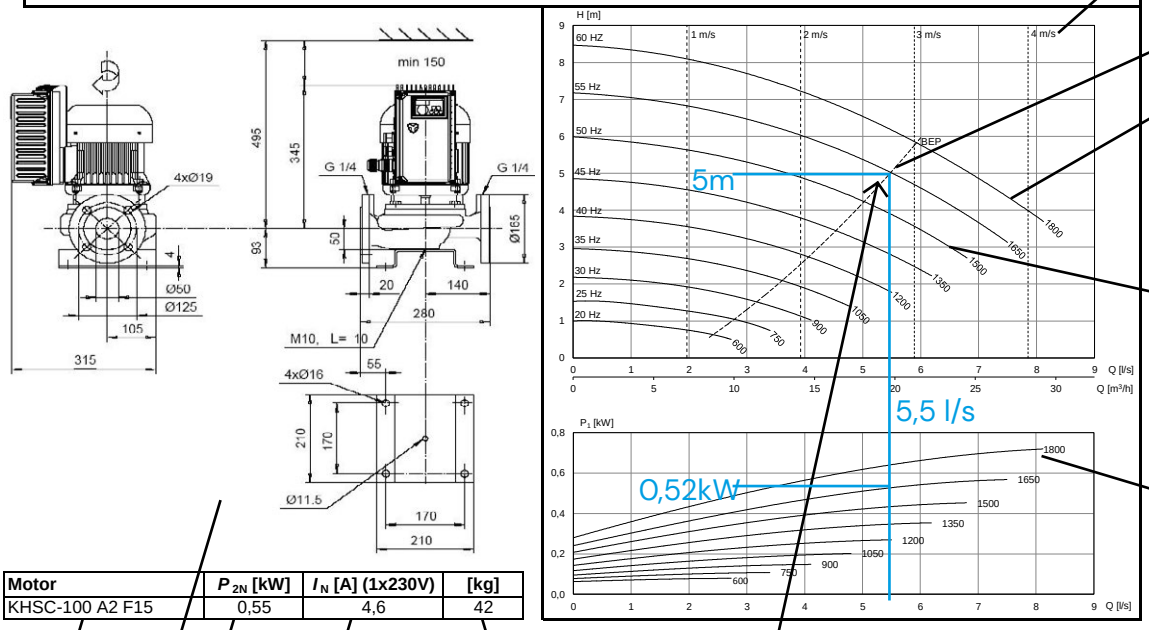

Best efficiency point BEP

QH curve at max. output frequency (60Hz)

QH curve at different frequencies (55 Hz). Minimum frequency curve is 20 Hz. SC pumps have a minimum frequency of 10 Hz as a factory setting.

Electric power on different rotation speed ranges.

Motor	P_{2N} [kW]	I_N [A] (1x230V)	[kg]
KHSC-100 A2 F15	0,55	4,6	42

Electric motor type | Pump nominal shaft power | Nominal single-phase current | Pump weight | Intersection at best efficiency point (BEP) | Dimensional drawing

An example of selecting a pump:

Duty point 5.5 l/s, 50kPa (5m)

1. Find a pump size with a BEP (best efficiency point) which is as close as possible to the required duty point.
2. Ensure that the output 5.5 l/s and head 5m intersect at the best efficiency point.
3. The best energy efficiency and lowest energy consumption are obtained by following the above steps.
4. If needed, it is possible to read the input power of the device on the P1 curve. In this case, the input power is 0.52 kW at the desired duty point.

NOTE! Liquid density and viscosity affect the amount of power required. Please check that the motor power is sufficient for liquids with a higher density and viscosity than water.

DATA SHEETS

INLINE PUMPS WITH INTEGRATED SC FREQUENCY CONVERTER
1X230V

AE-series, threaded G1-G1¼

L- and AL-series, flanged DN32-DN100

AE-26/4 SC | **AEP-26/4 SC**

G 1	600 - 1500 r/min	Ø 125 mm	1~ 230 V

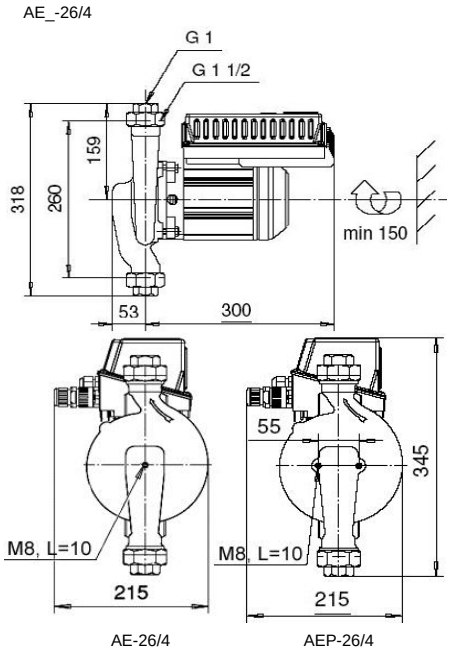

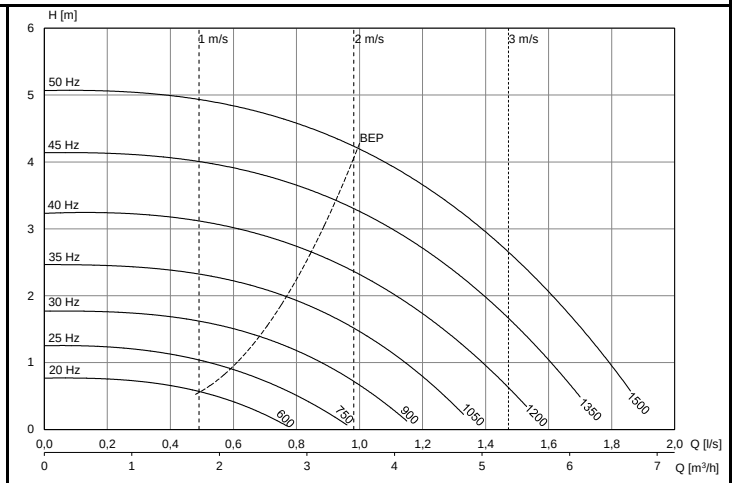

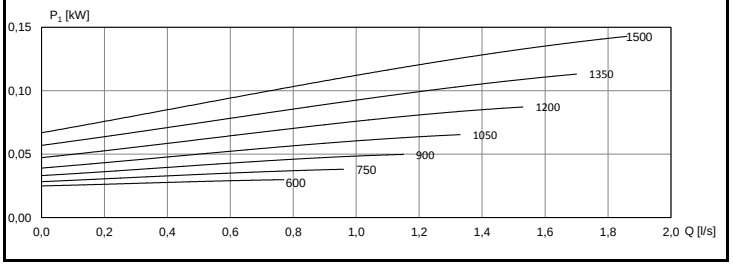

Motor	P_{2N} [kW]	I_N [A] (1x230V)	[kg]
OPSC-742 N12	0,08	1,1	14

AE-26/4 SC | **AEP-26/4 SC**

G 1	600 - 1950 r/min	Ø 125 mm	1~ 230 V

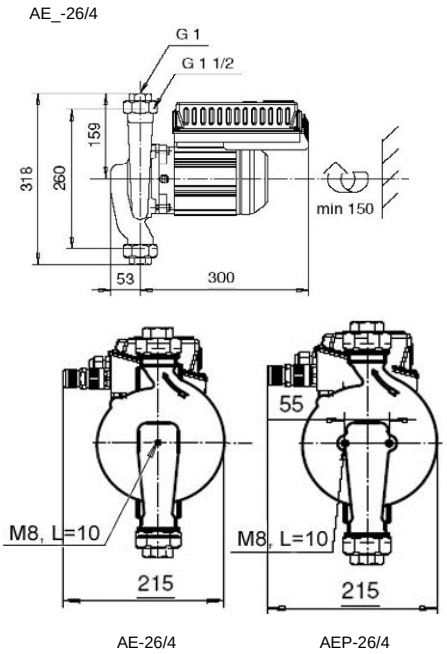

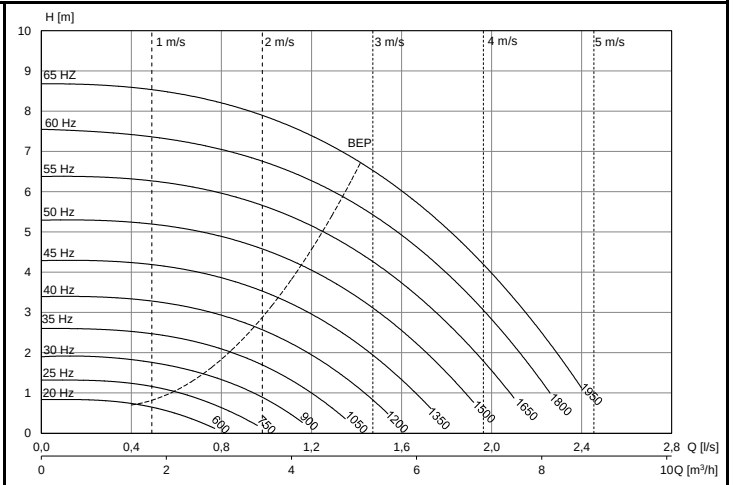

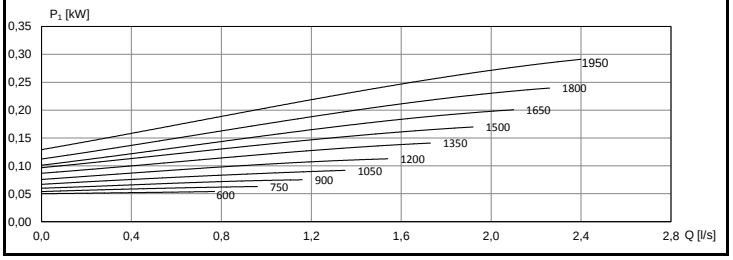

Motor	P_{2N} [kW]	I_N [A] (1x230V)	[kg]
OPSC-752 N12	0,2	2,1	15

AE-26/2 SC | AEP-26/2 SC

G 1	1200 - 3000 r/min	Ø 125 mm	1~ 230 V

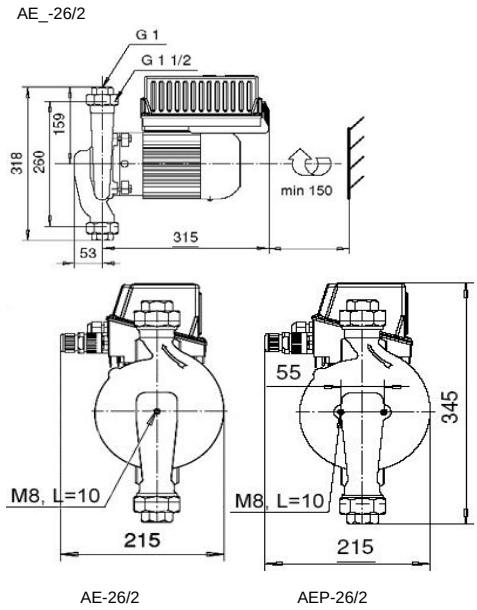

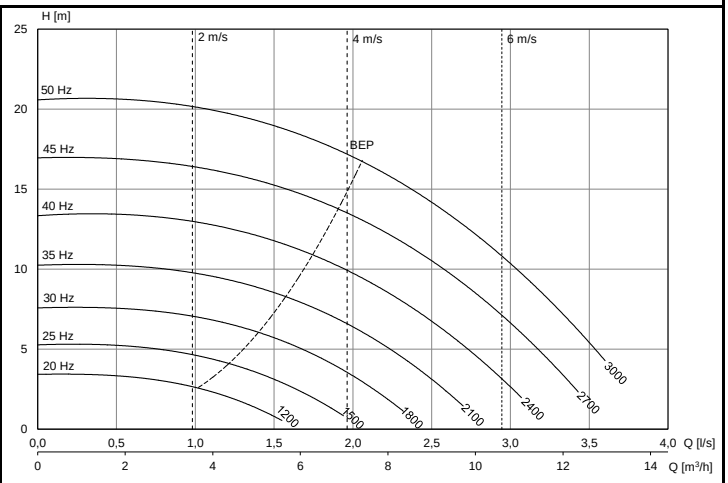

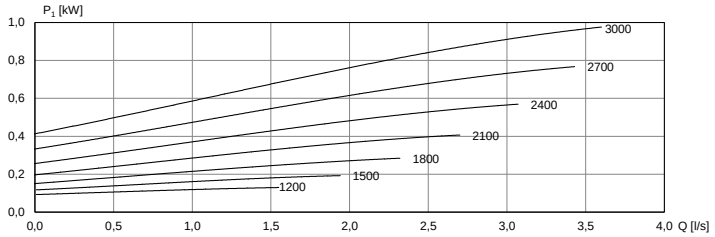

Motor	P_{2N} [kW]	I_N [A] (1x230V)	[kg]
KHSC-841 N12	0,65	6,0	19

AE-33/4 SC | AEP-33/4 SC

G 1 1/4	600 - 1500 r/min	Ø 130 mm	1~ 230 V

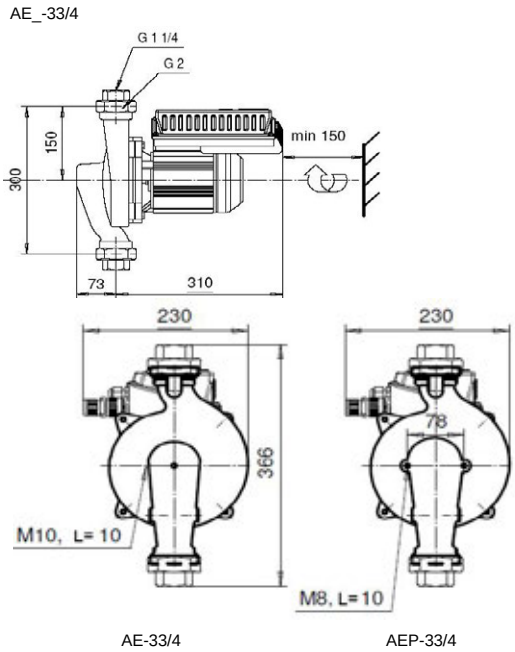

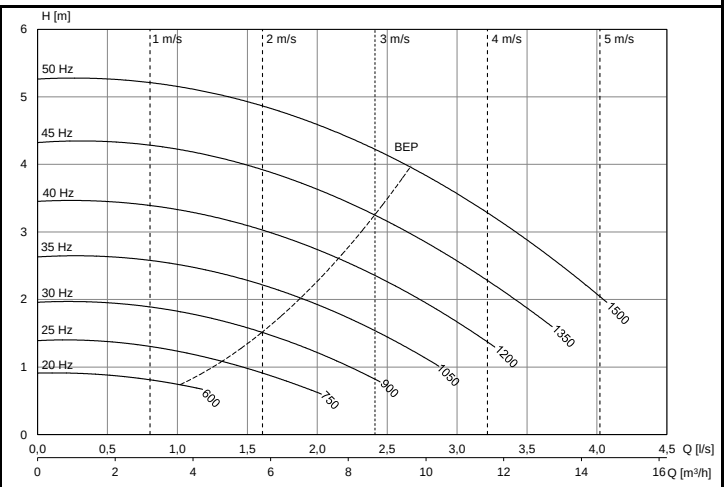

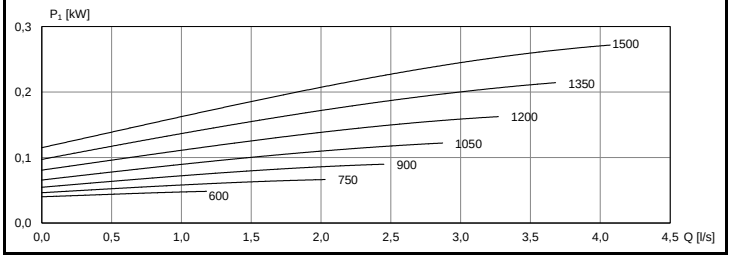

Motor	P_{2N} [kW]	I_N [A] (1x230V)	[kg]
OPSC-752 N13	0,2	2,1	20

AE-33/4 SC | AEP-33/4 SC

G 1 1/4	600 - 1800 r/min	Ø 135 mm	1~ 230 V

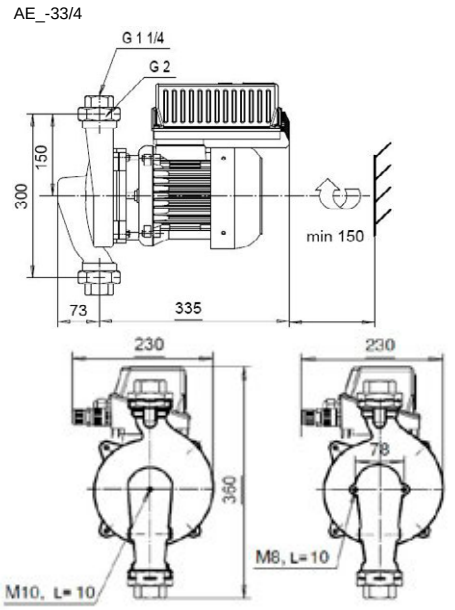

AE-33/4 AEP-33/4

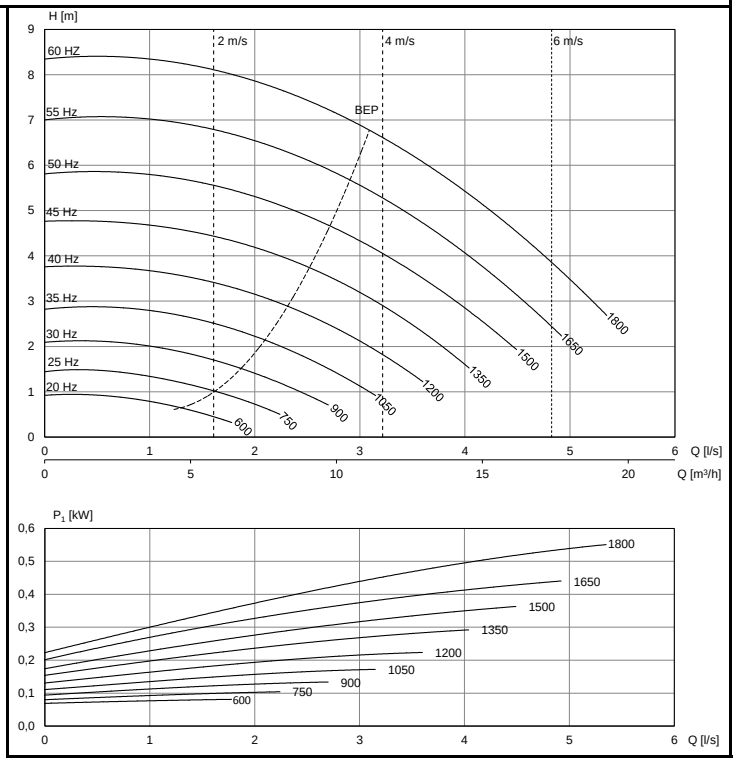

Motor	P_{2N} [kW]	I_N [A] (1x230V)	[kg]
KHSC-100 A2 N13	0,37	3,6	35

L-32A/4 SC

DN 32	600 - 1500 r/min	Ø 105 mm	1~ 230 V

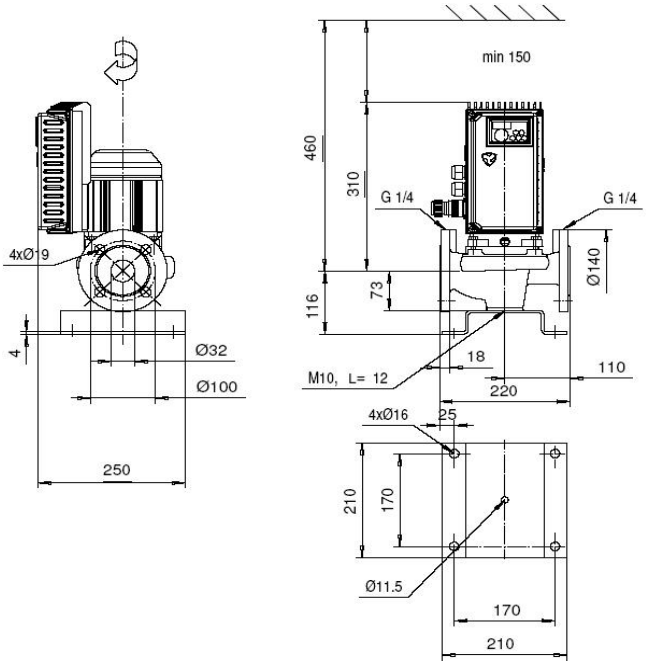

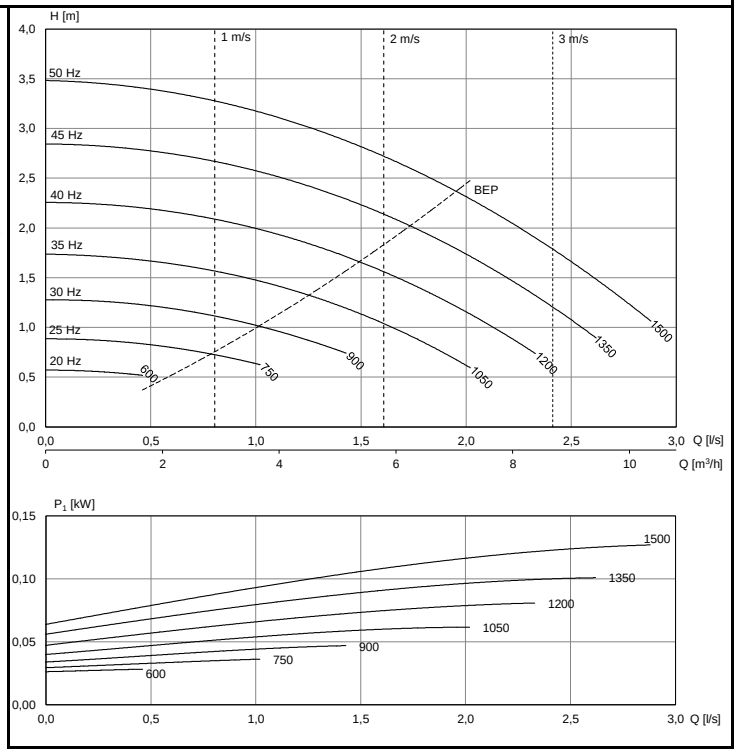

Motor	P_{2N} [kW]	I_N [A] (1x230V)	[kg]
OPSC-742 N12	0,08	1,1	14

L-32A/4 SC

DN 32	600 - 1950 r/min	Ø 105 mm	1~ 230 V

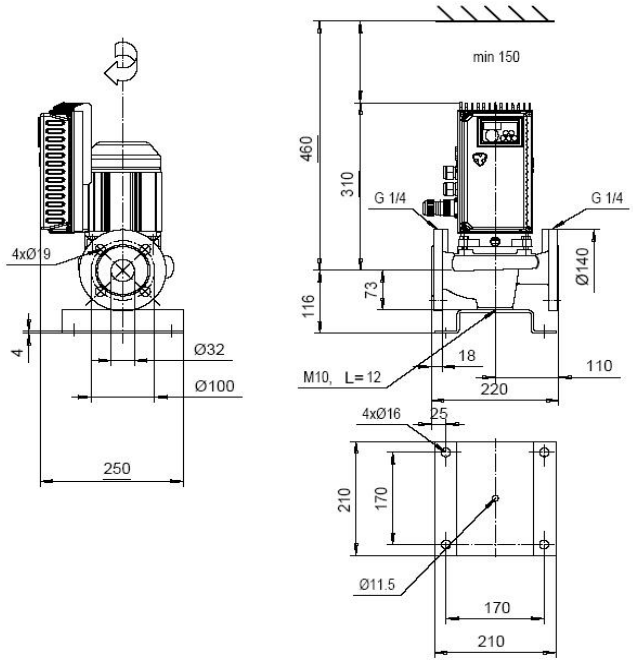

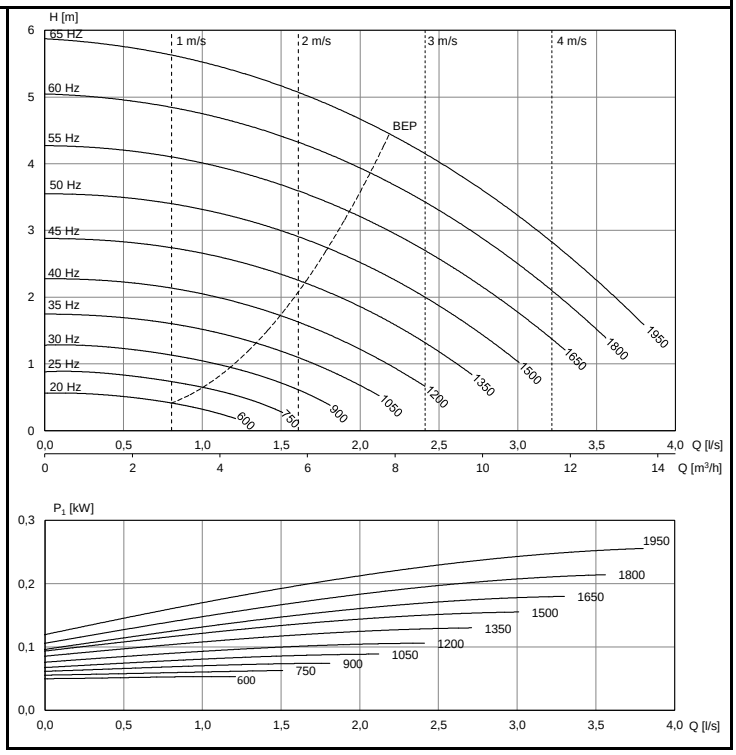

Motor 230V	P_{2N} [kW]	I_N [A] (1x230V)	[kg]
OPSC-752 N12	0,2	2,1	19

L-32A/2 SC

DN 32	1200 - 3000 r/min	Ø 105 mm	1~ 230 V

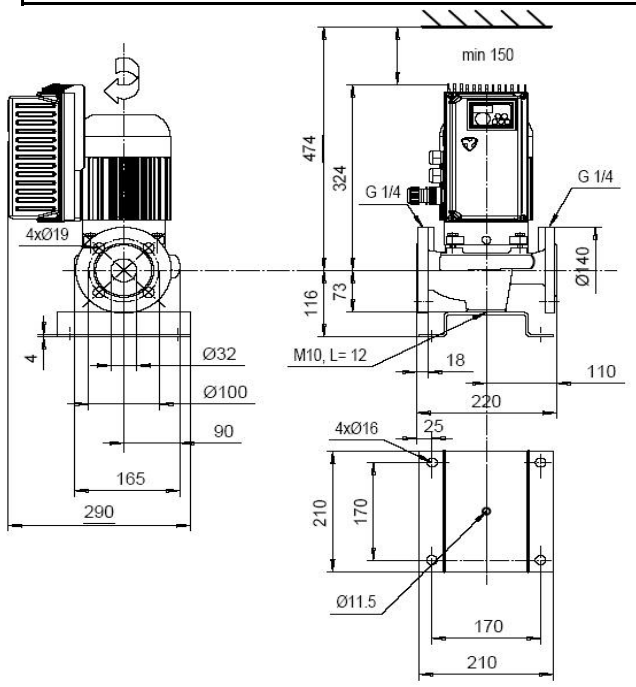

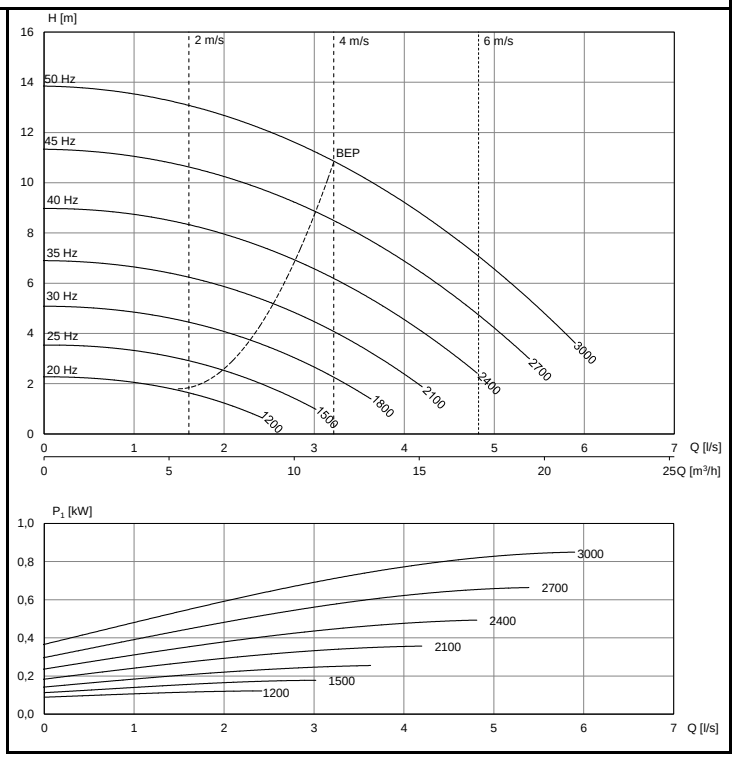

Motor	P_{2N} [kW]	I_N [A] (1x230V)	[kg]
KHSC-841 N12	0,65	6,0	24

L-40A/4 SC

DN 40	600 - 1500 r/min	Ø 130 mm	1~ 230 V

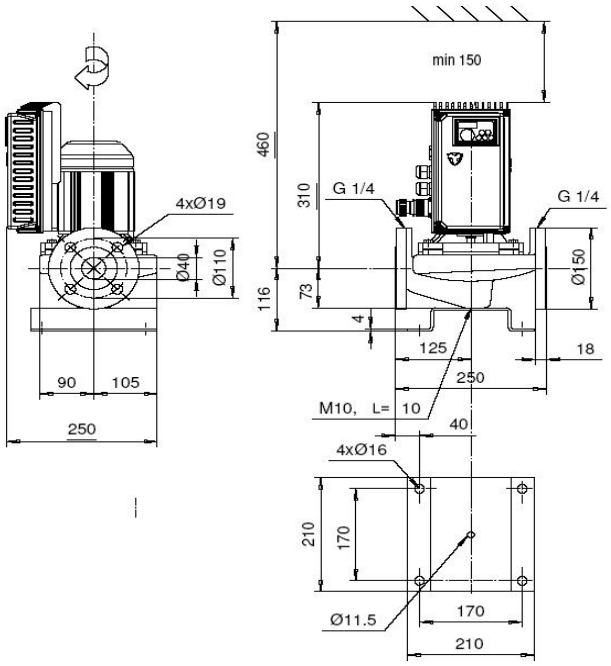

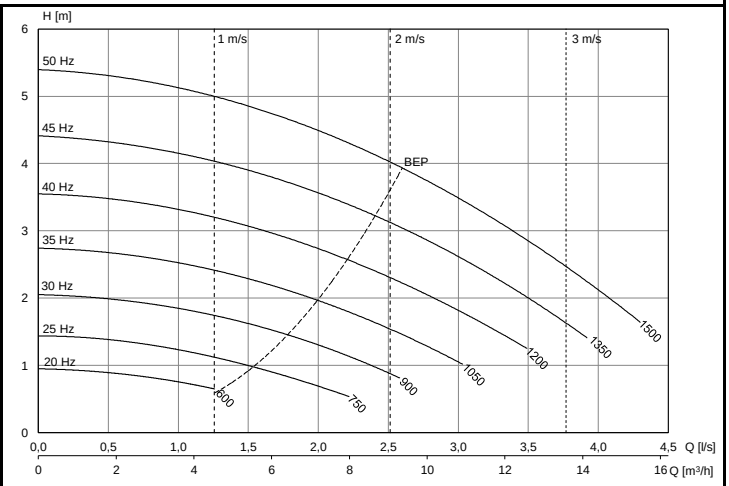

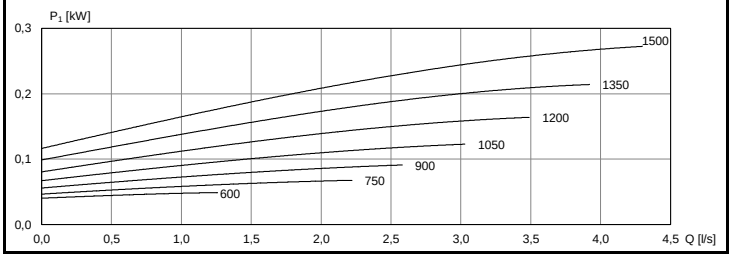

Motor	P_{2N} [kW]	I_N [A] (1x230V)	[kg]
OPSC-752 N13	0,2	2,1	24

L-40A/4 SC

DN 40	600 - 1800 r/min	Ø 135 mm	1~ 230 V

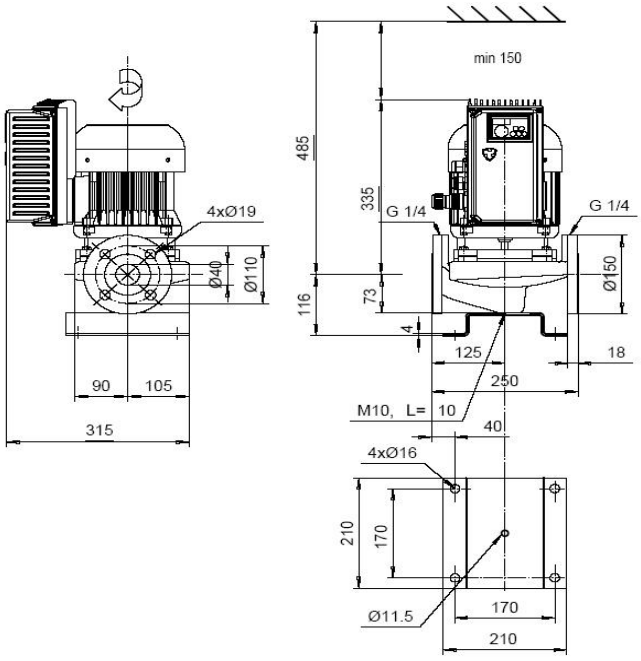

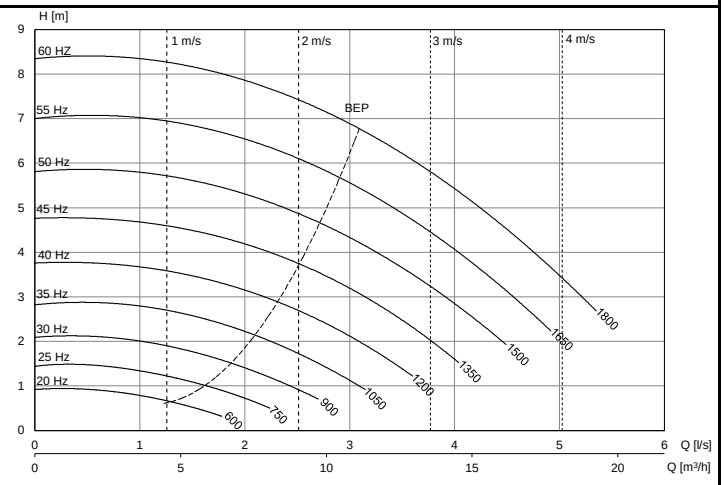

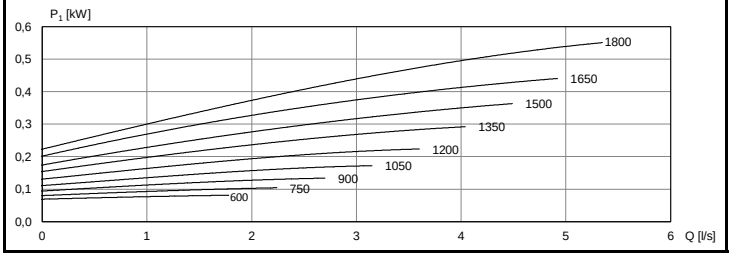

Motor	P_{2N} [kW]	I_N [A] (1x230V)	[kg]
KHSC-100 A2 N13	0,37	3,6	40

L-50A/4 SC | **LP-50A/4 SC**

DN 50	600 - 1500 r/min	Ø 120 mm	1~ 230 V

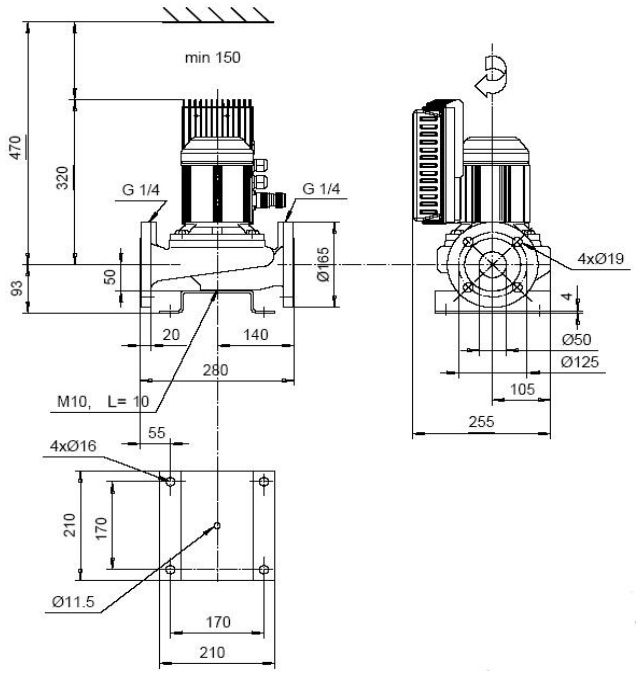

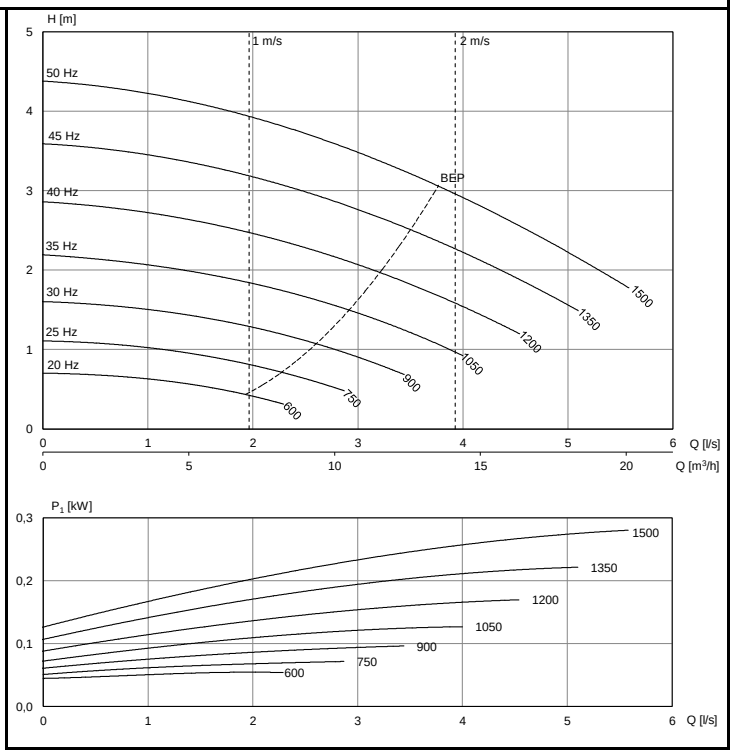

Motor	P_{2N} [kW]	I_N [A] (1x230V)	[kg]
OPSC-752 F15	0,2	2,1	26

L-50A/4 SC | **LP-50A/4 SC**

DN 50	600 - 1800 r/min	Ø 135 mm	1~ 230 V

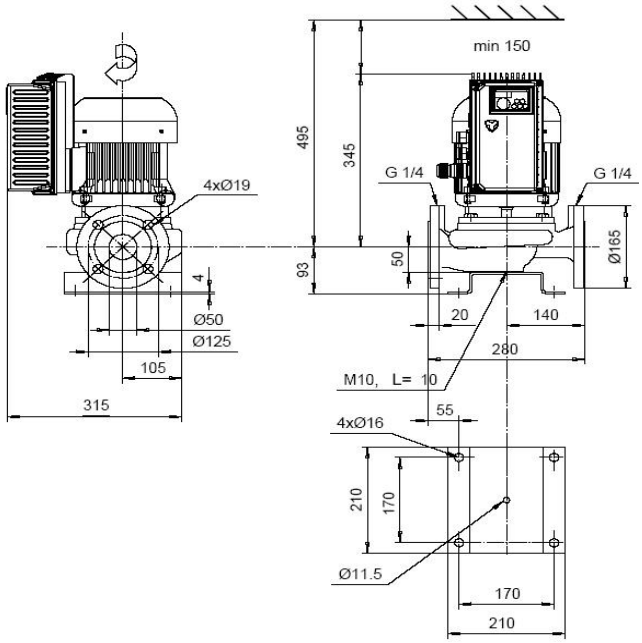

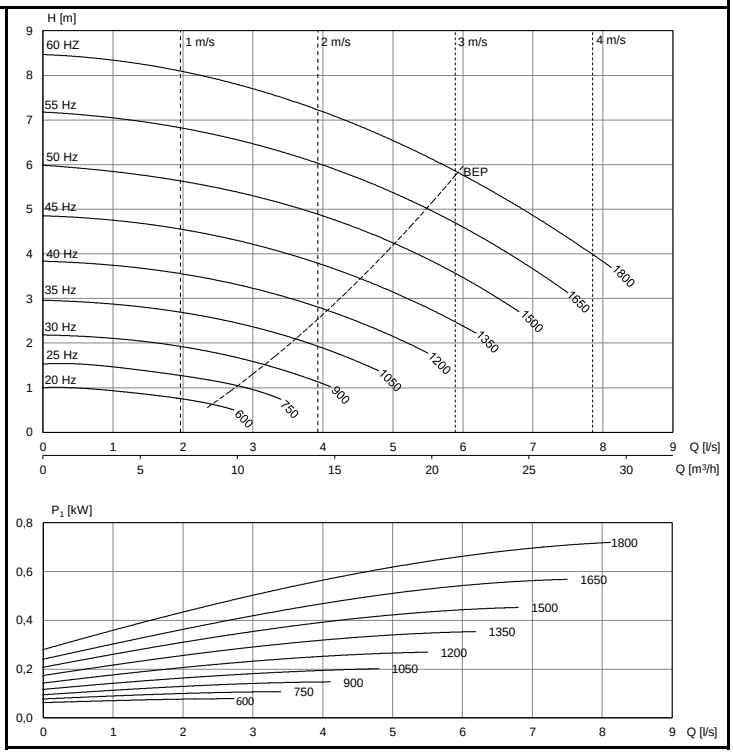

Motor	P_{2N} [kW]	I_N [A] (1x230V)	[kg]
KHSC-100 A2 F15	0,55	4,6	42

L-65A/4 SC | **LH-65A/4 SC**

DN 65 | **600 - 1500 r/min** | **Ø 148 mm** | **1~ 230 V**

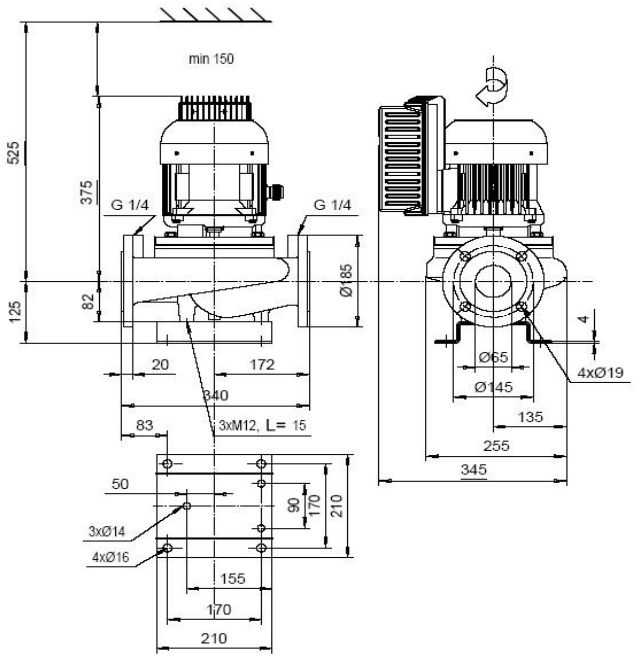

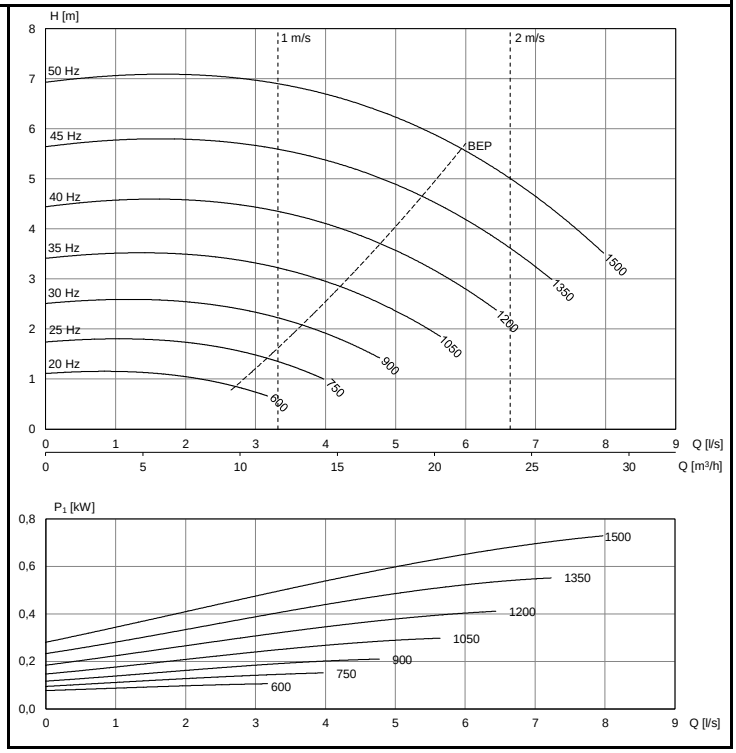

Motor	P_{2N} [kW]	I_N [A]	[kg]
KHSC-100 A2 F19	0,55	4,6	47

L-65A/4 SC | **LH-65A/4 SC**

DN 65 | **600 - 1500 r/min** | **Ø 164 mm** | **1~ 230 V**

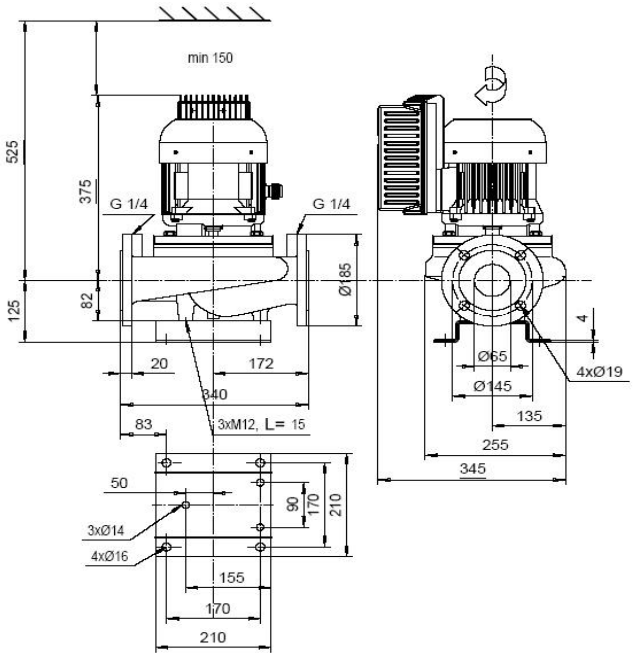

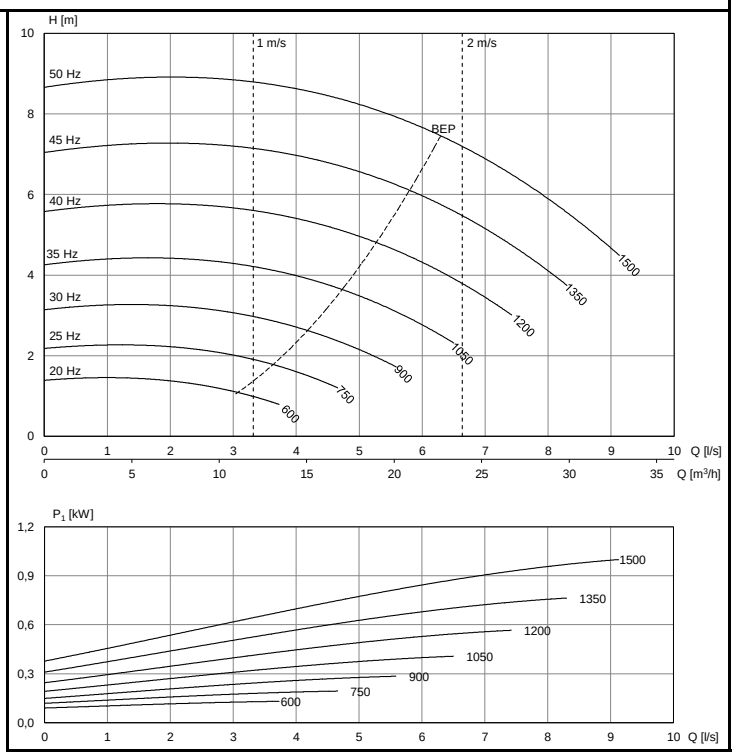

Motor	P_{2N} [kW]	I_N [A] (1x230V)	[kg]
KHSC-100 B2 F19	0,75	6,1	47

L-80A/4 SC | **LH-80A/4 SC**

DN 80	600 - 1500 r/min	Ø 147 mm	1~ 230 V

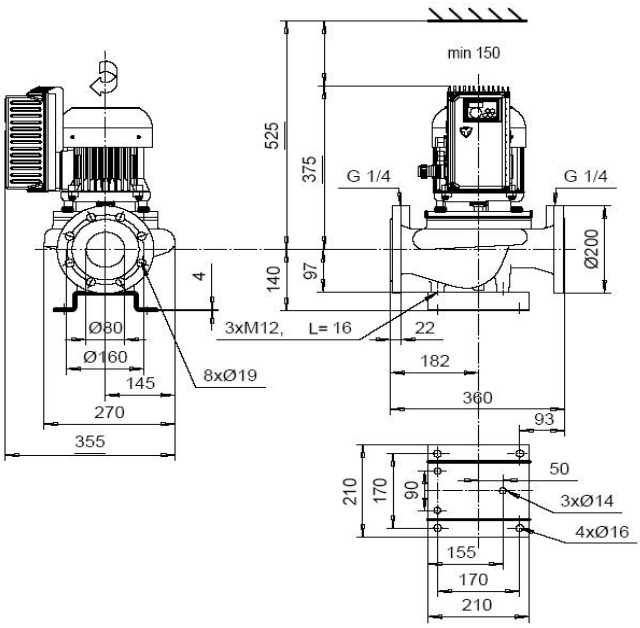

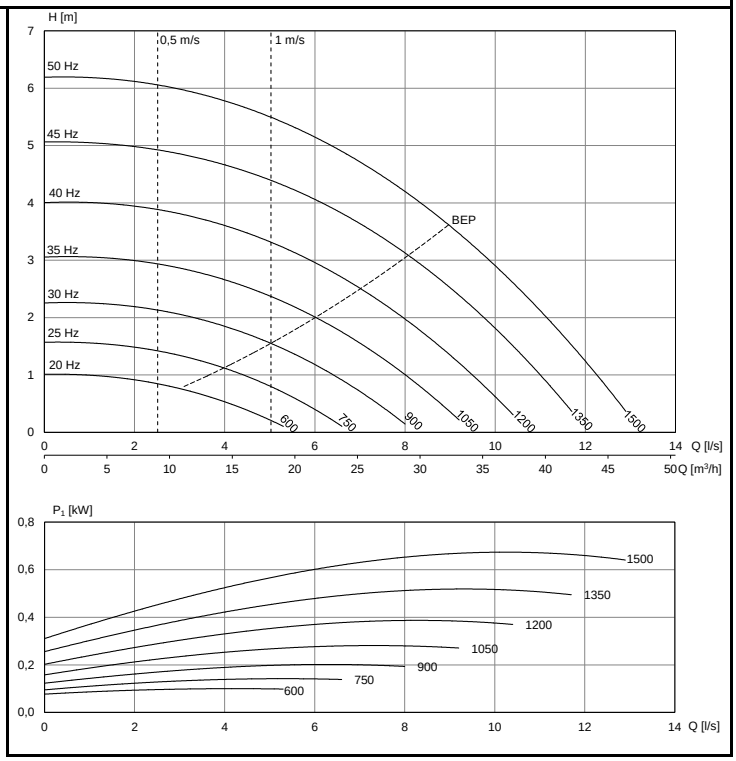

Motor	P_{2N} [kW]	I_N [A] (1x230V)	[kg]
KHSC-100 A2 F19	0,55	4,6	48

L-80A/4 SC | **LH-80A/4 SC**

DN 80	600 - 1500 r/min	Ø 158 mm	1~ 230 V

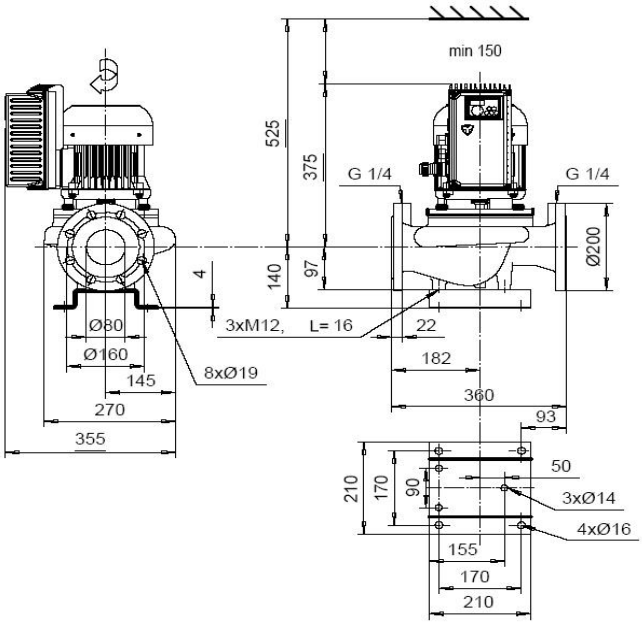

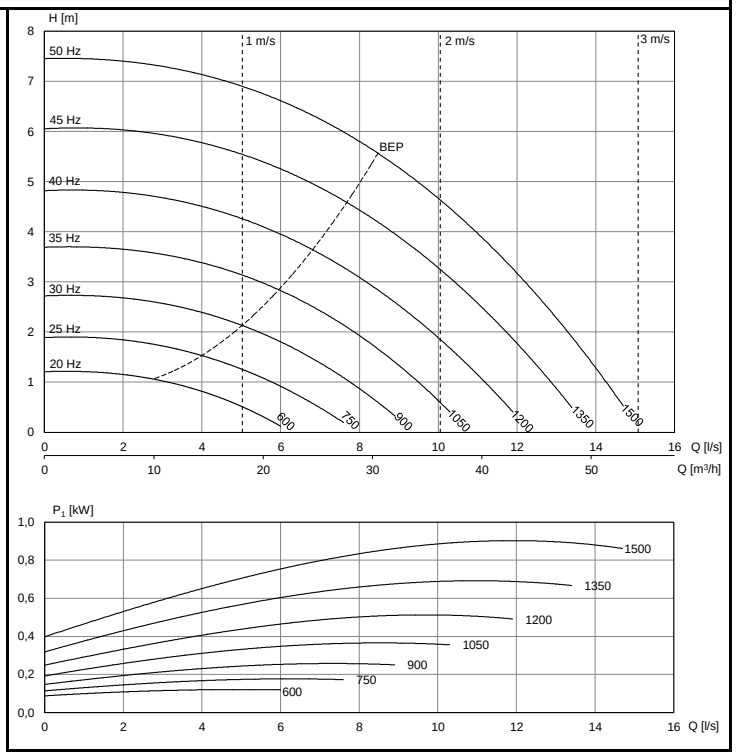

Motor	P_{2N} [kW]	I_N [A] (1x230V)	[kg]
KHSC-100 B2 F19	0,75	6,1	48

AL-1102/4 SC **ALH-1102/4 SC** **ALP-1102/4 SC** **ALS-1102/4 SC**

DN 100	600 - 1500 r/min	Ø 142 mm	1~ 230 V

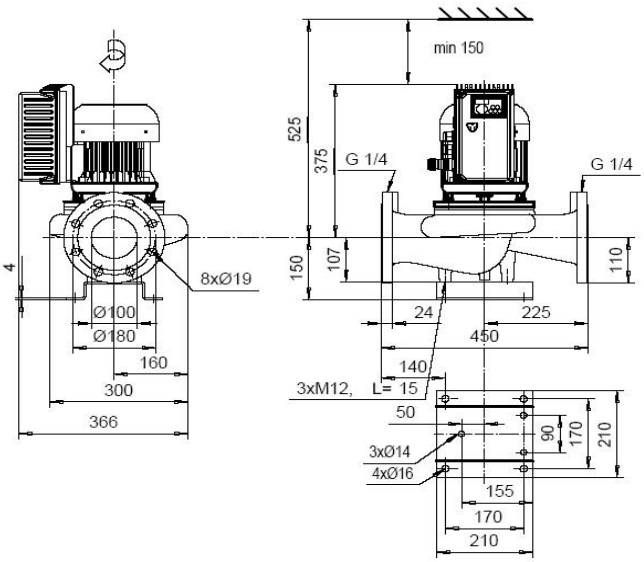

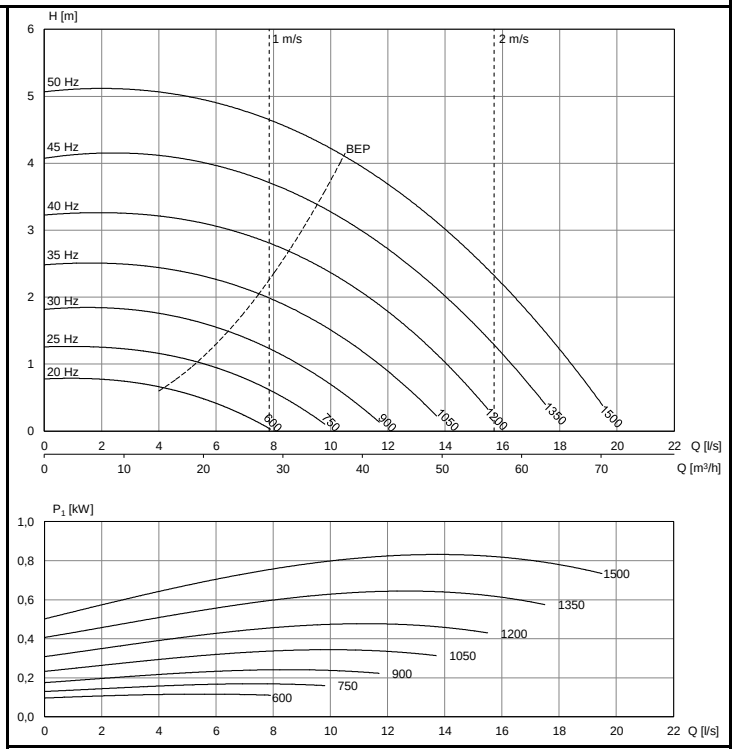

Motor	P_{2N} [kW]	I_N [A] (1x230V)	[kg]
KHSC-100 B2 F19	0,75	6,1	59

DATA SHEETS

INLINE PUMPS WITH INTEGRATED VS FREQUENCY CONVERTER

3X400V

AE-series, threaded G1-G1¼

L- and AL-series, flanged DN32-DN150

AE-26/2 VS | AEP-26/2 VS

G 1	1200 - 3600 r/min	Ø125	3~ 400 V

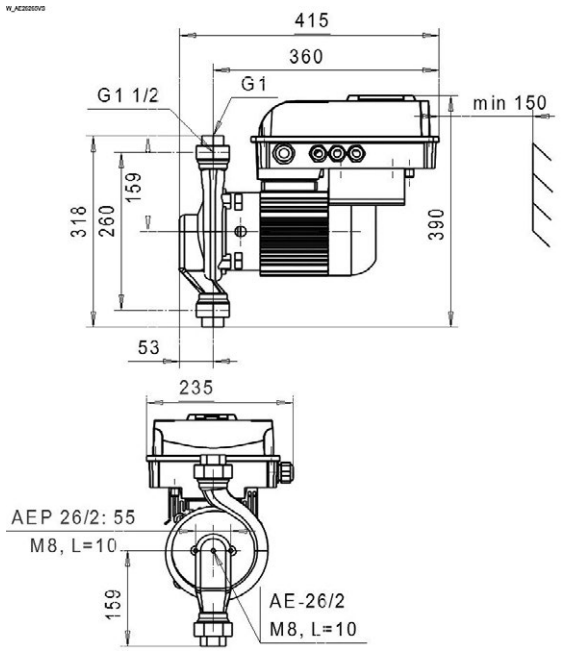

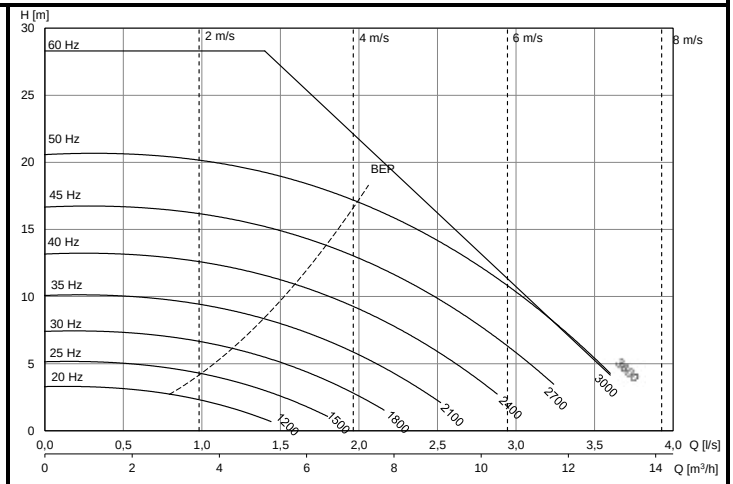

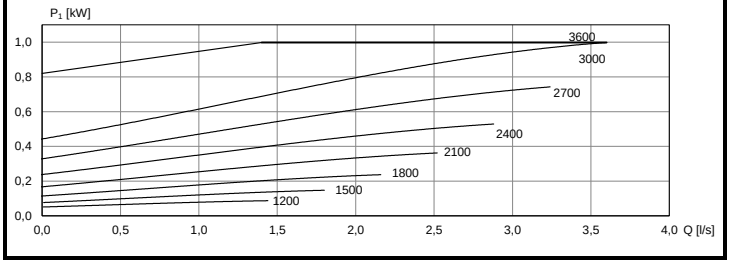

Motor	P_{2N} [kW]	I_N [A] (3x400V)	[kg]
KHVS-841 D N12	0,65	3,0	20

AE-33/2 VS | AEP-33/2 VS

G 1 1/4	1200 - 3600 r/min	Ø120	3~ 400 V

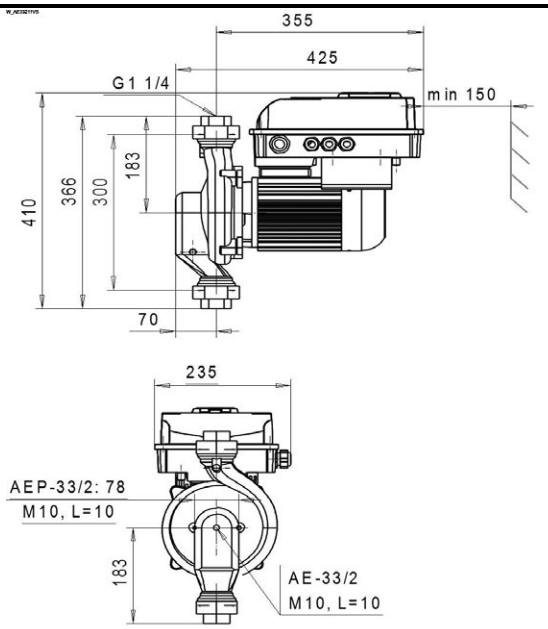

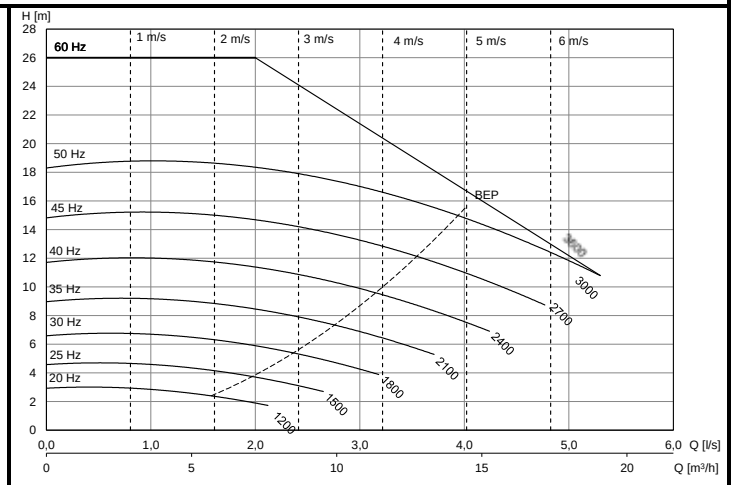

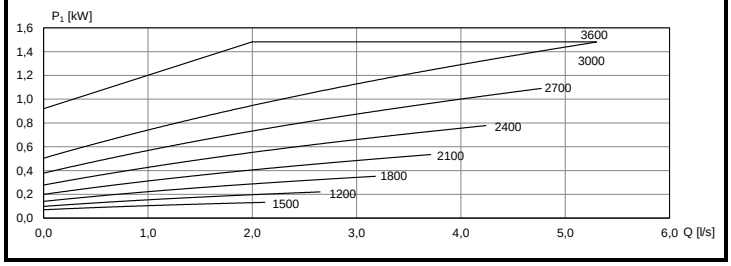

Motor	P_{2N} [kW]	I_N [A] (3x400V)	[kg]
KHVS-871 N13	1,1	4,0	27

AE-33/2 VS | AEP-33/2 VS

G 1 1/4	1200 - 3600 r/min	Ø135	3~ 400 V

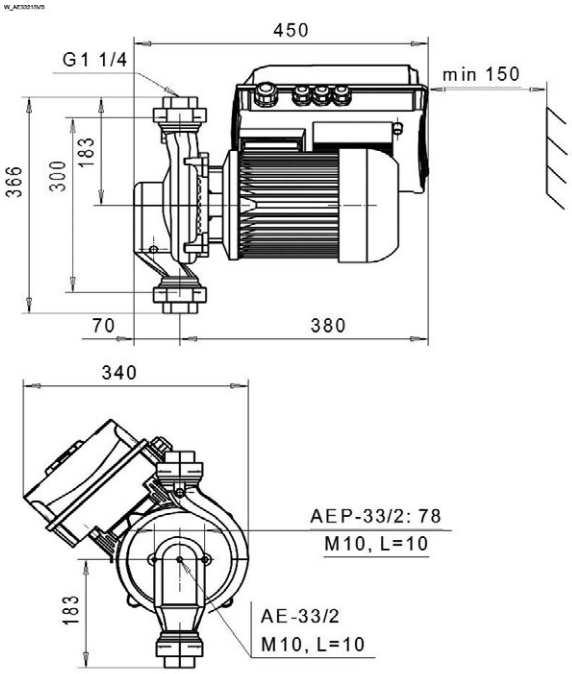

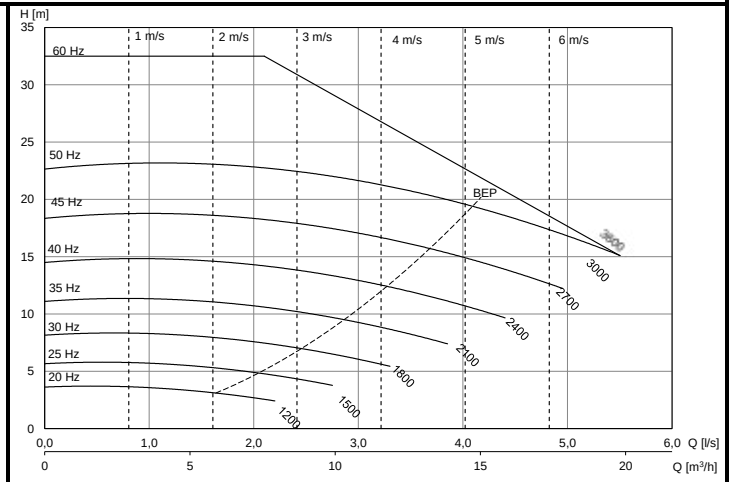

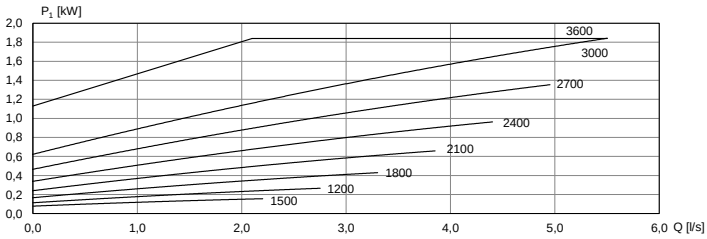

Motor	P_{2N} [kW]	I_N [A] (3x400V)	[kg]
KHVS-101 C1 N13	1,5	4,0	38

L-32A/2 VS

DN32	1200 - 3600 r/min	Ø105	3~ 400 V

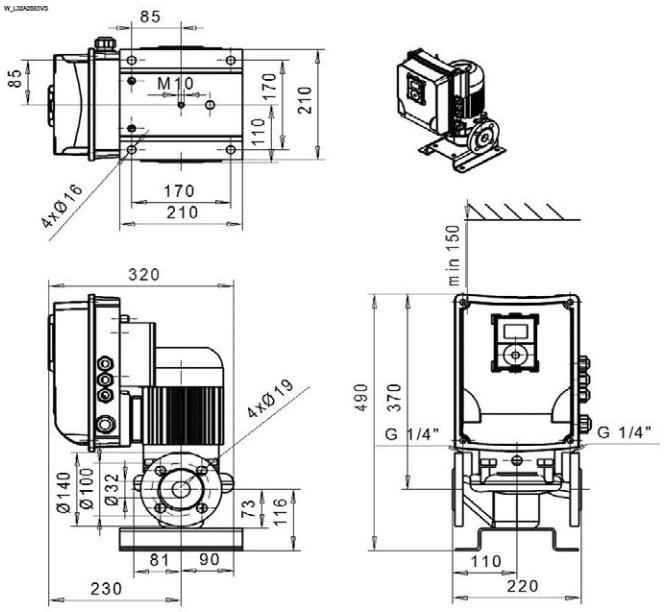

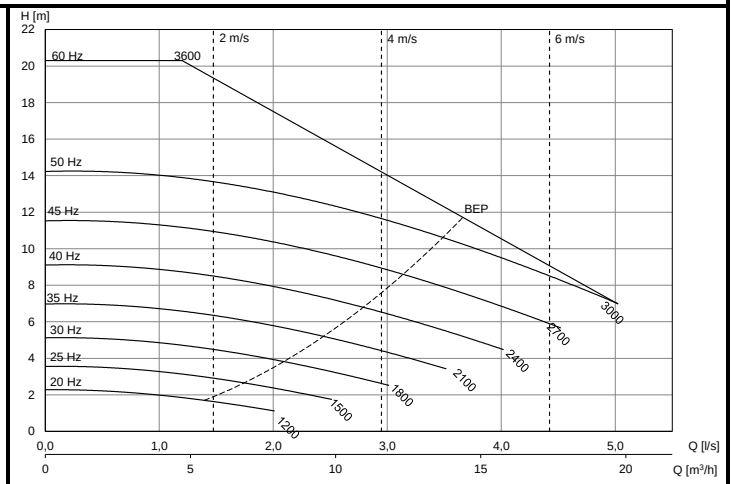

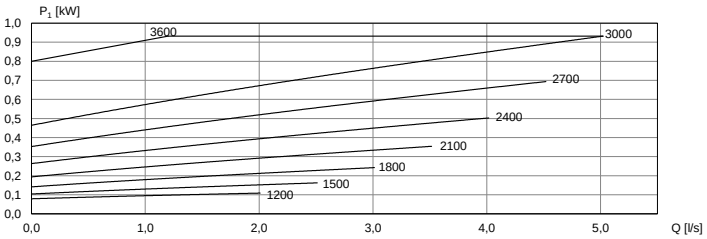

Motor	P_{2N} [kW]	I_N [A] (3x400V)	[kg]
KHVS-841 D N12	0,65	3,0	27

L-32A/2 VS

DN32	1200 - 3600 r/min	Ø105	3~ 400 V

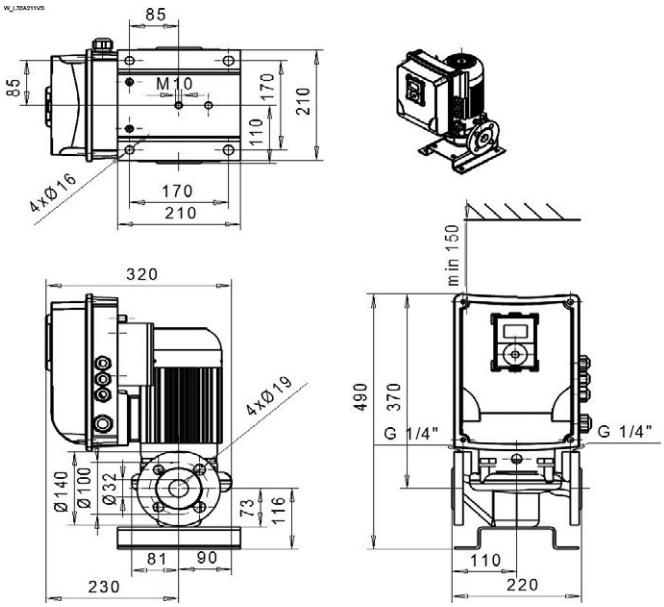

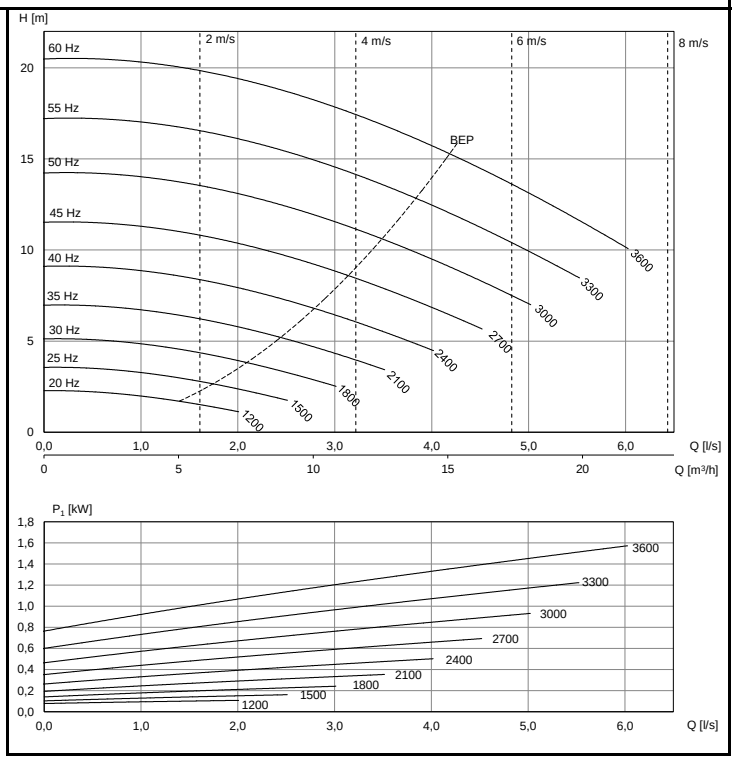

Motor	P_{2N} [kW]	I_N [A] (3x400V)	[kg]
KHVS-871 N12	1,1	4,0	30

L-40A/2 VS

DN40	1200 - 3600 r/min	Ø120	3~ 400 V

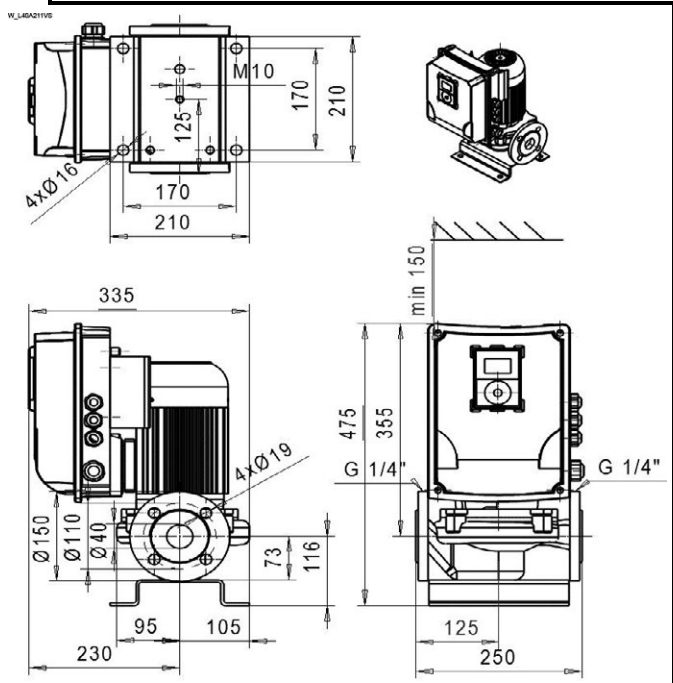

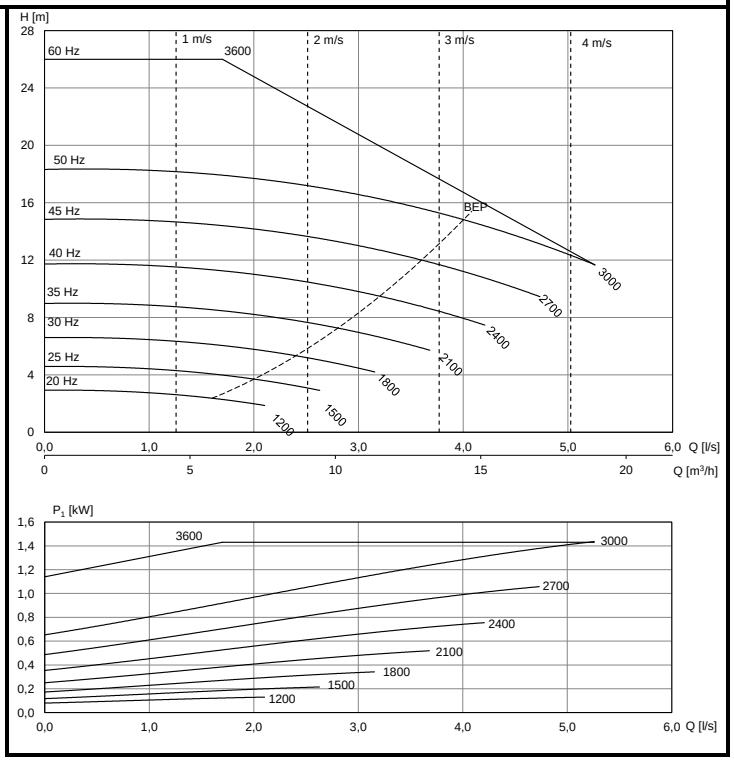

Motor	P_{2N} [kW]	I_N [A] (3x400V)	[kg]
KHVS-871 N13	1,1	4,0	32

L-40A/2 VS

DN40	1200 - 3600 r/min	Ø135	3~ 400 V

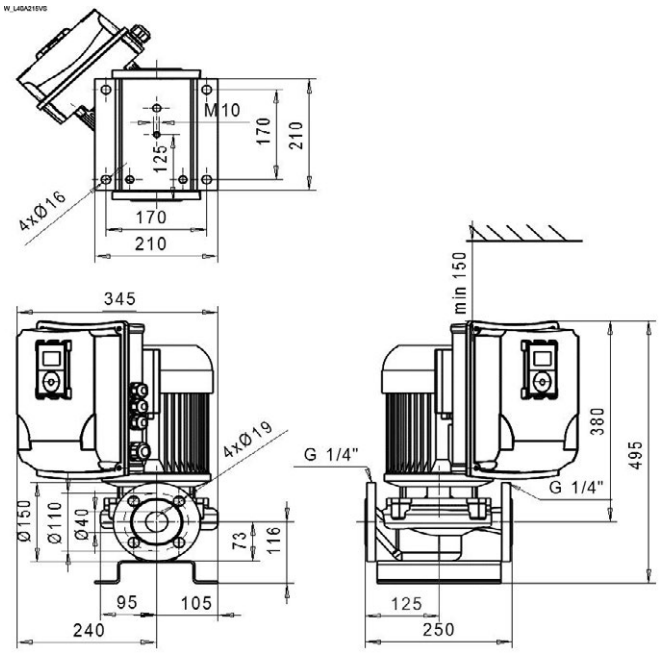

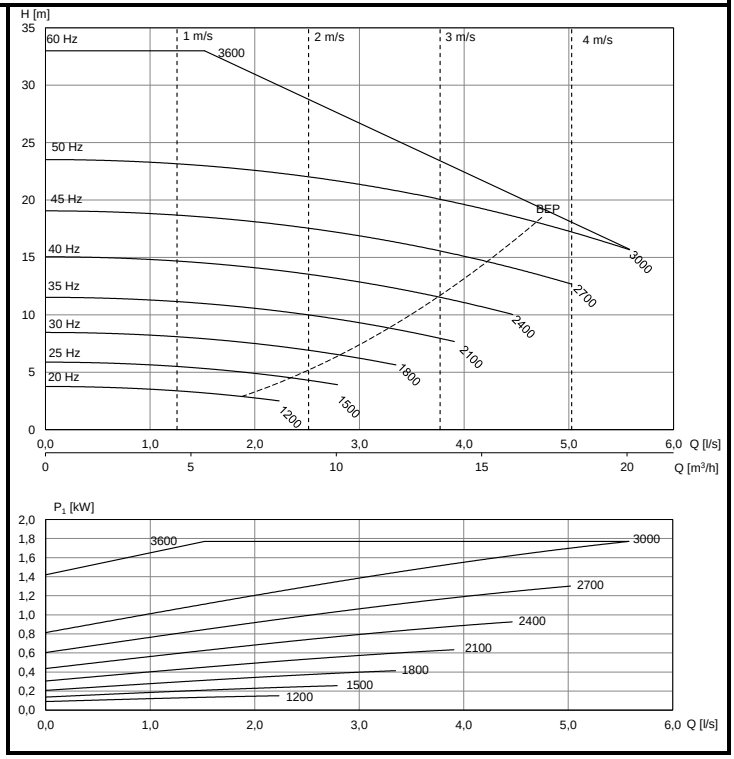

Motor	P_{2N} [kW]	I_N [A] (3x400V)	[kg]
KHVS-101 C1 N13	1,5	4,0	43

L-50A/4 VS LP-50A/4 VS

DN50	600 - 1800 r/min	Ø150	3~ 400 V

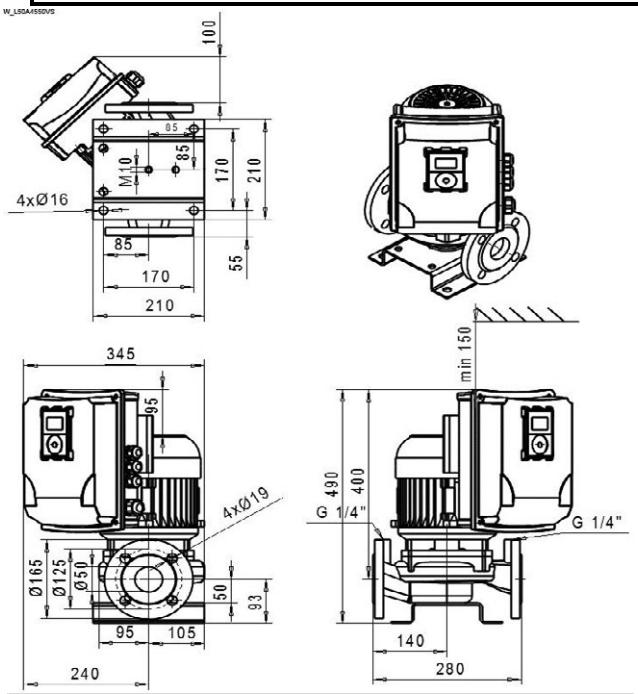

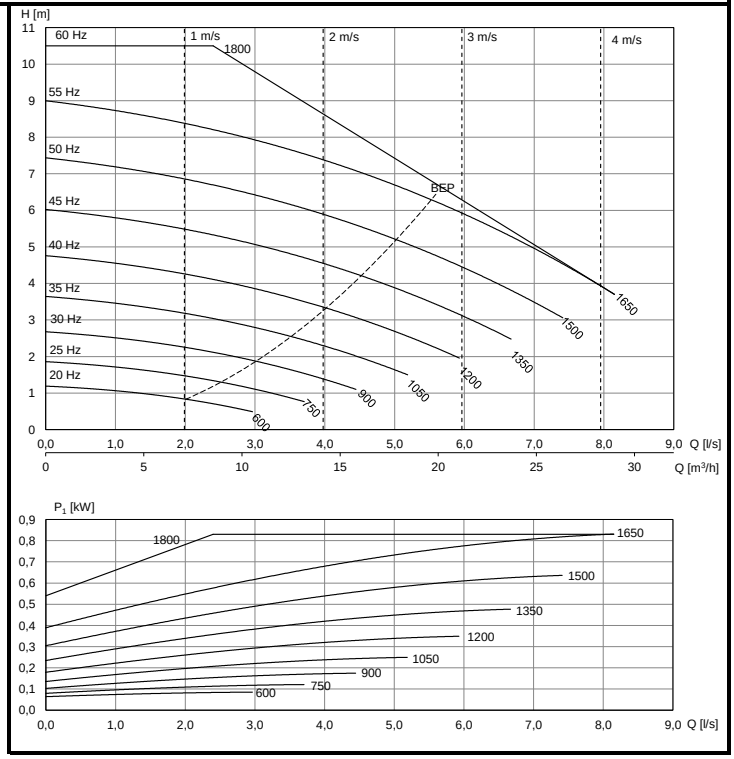

Motor	P_{2N} [kW]	I_N [A] (3x400V)	[kg]
KHVS-100 B2 F15	0,55	2,2	42

L-50A/4 VS | LP-50A/4 VS

DN50	600 - 2100 r/min	Ø150	3~ 400 V

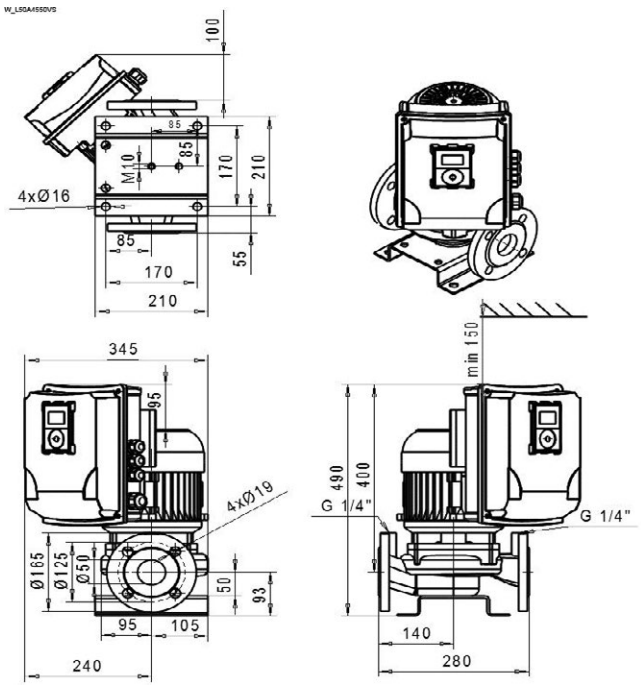

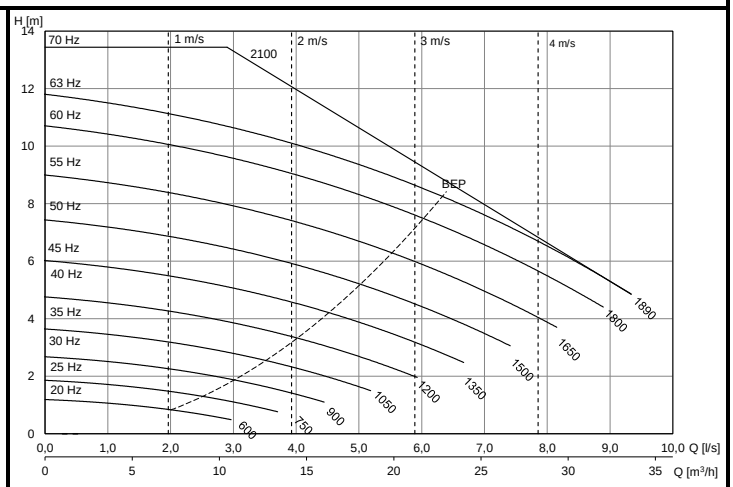

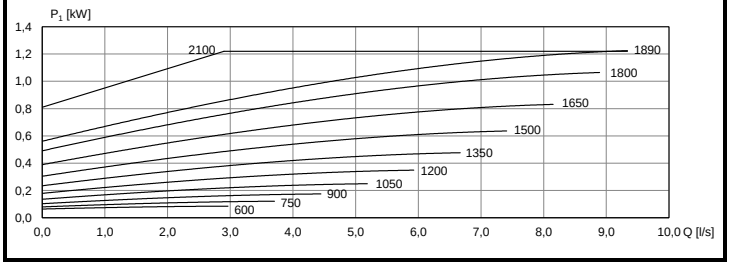

Motor	P_{2N} [kW]	I_N [A] (3x400V)	[kg]
KHVS-100 B2 F15	0,9	3,0	42

L-50B/2 VS | LP-50B/2 VS

DN50	1200 - 3600 r/min	Ø120	3~ 400 V

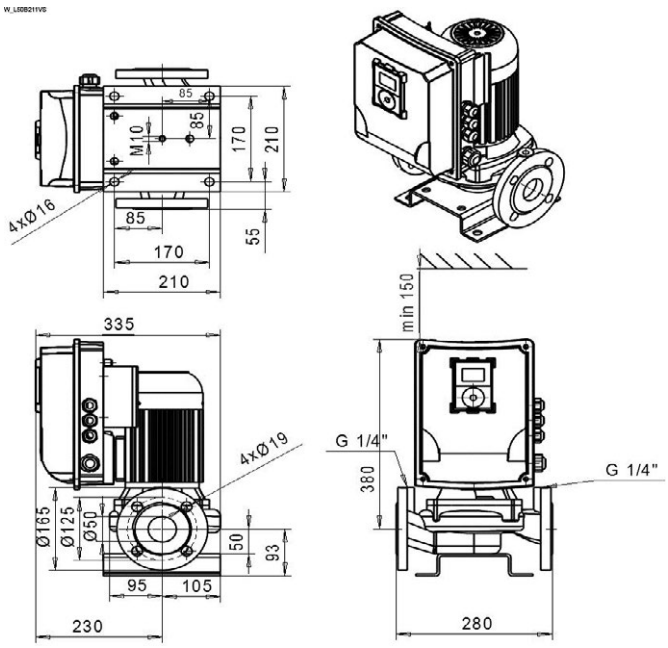

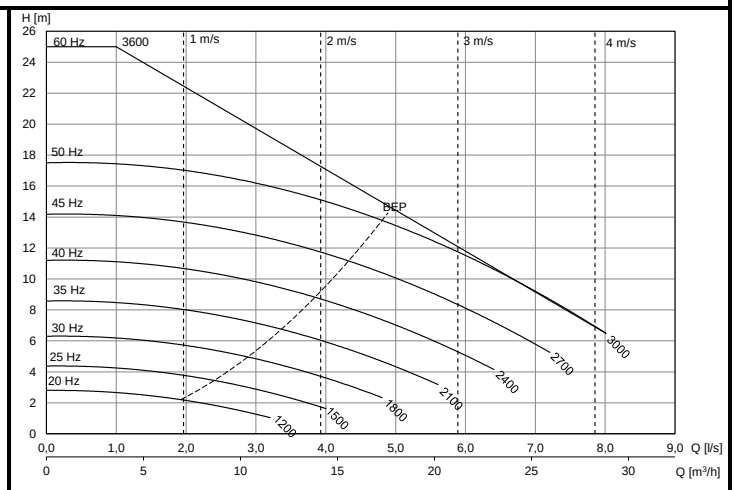

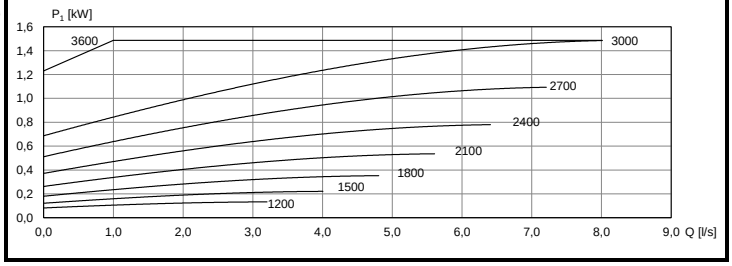

Motor	P_{2N} [kW]	I_N [A] (3x400V)	[kg]
KHVS-871 F15	1,1	4,0	36

L-50D/2 VS | **LH-50D/2 VS** | **LP-50D/2 VS**

DN50	1200 - 3600 r/min	Ø130	3~ 400 V

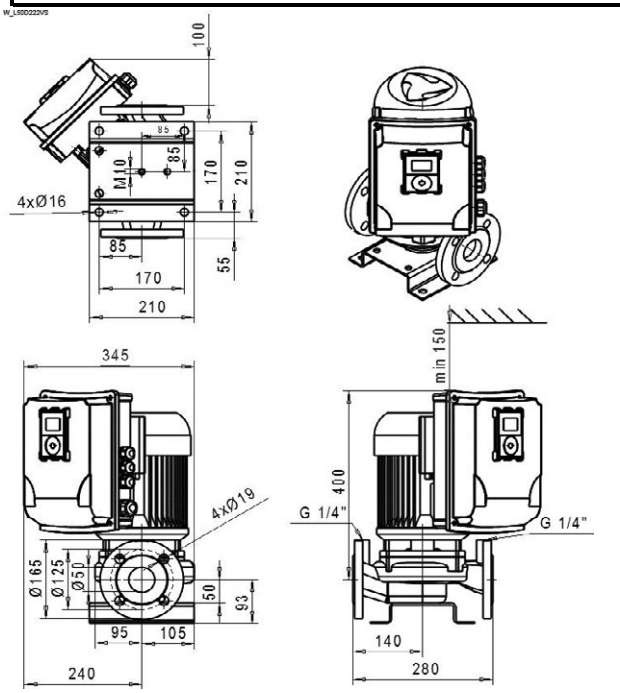

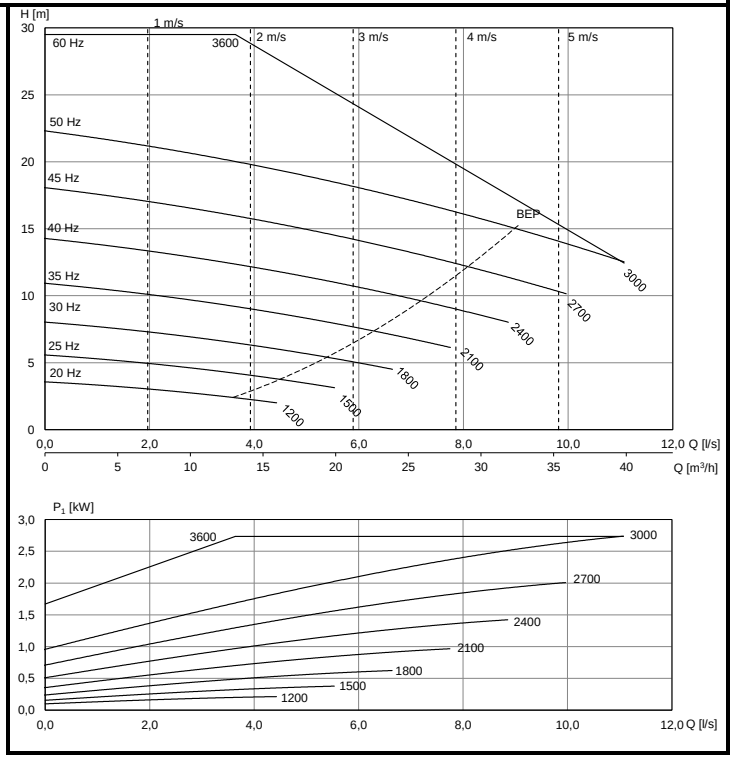

Motor	P_{2N} [kW]	I_N [A] (3x400V)	[kg]
KHVS-101 D1 F15	2,2	7,3	49

L-50D/2 VS | **LH-50D/2 VS** | **LP-50D/2 VS**

DN50	1200 - 3600 r/min	Ø150	3~ 400 V

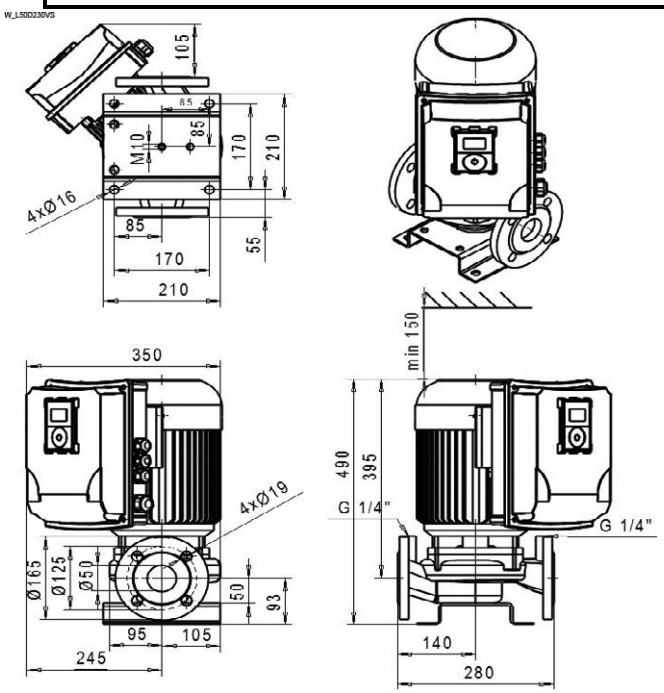

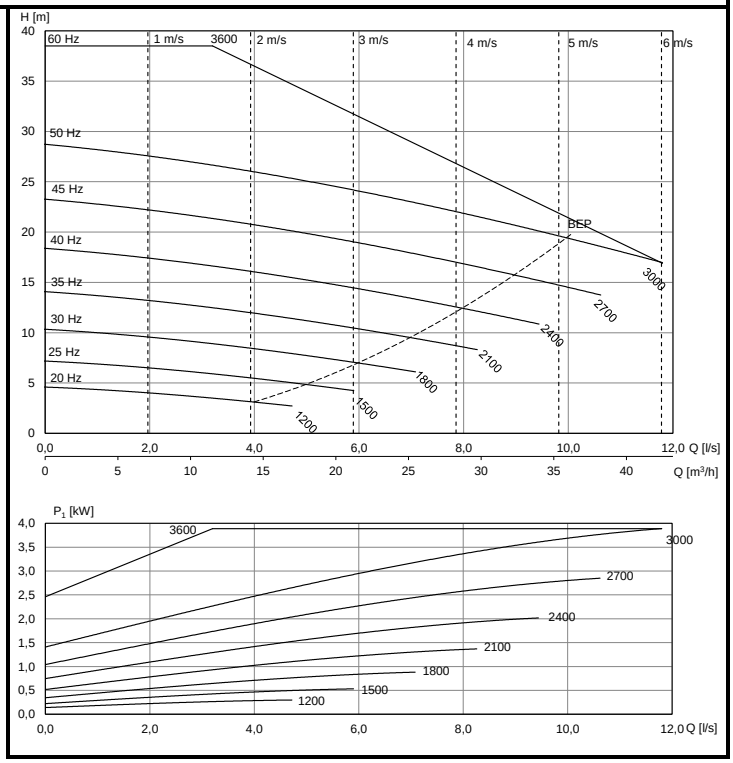

Motor	P_{2N} [kW]	I_N [A] (3x400V)	[kg]
KHVS-112 C1 F15	3	9,6	55

L-65A/4 VS | **LH-65A/4 VS**

DN65	600 - 1800 r/min	Ø148	3~ 400 V

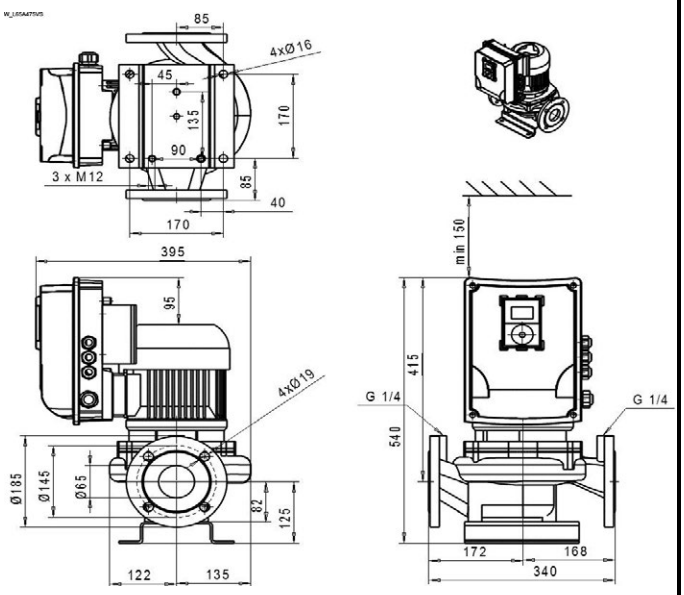

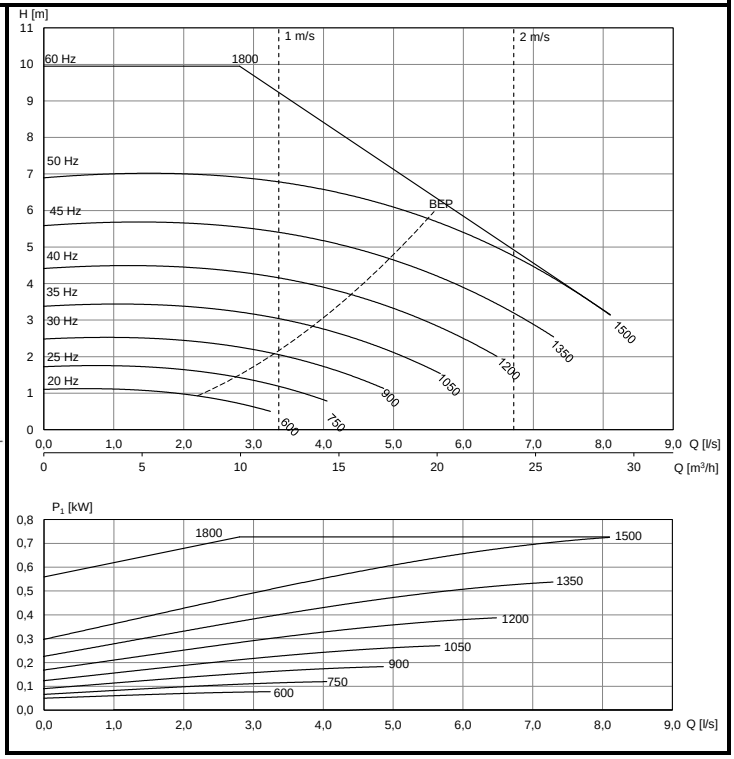

Motor	P_{2N} [kW]	I_N [A] (3x400V)	[kg]
KHVS-100 B2 F15	0,55	2,2	48

L-65A/4 VS | **LH-65A/4 VS**

DN65	600 - 2100 r/min	Ø148	3~ 400 V

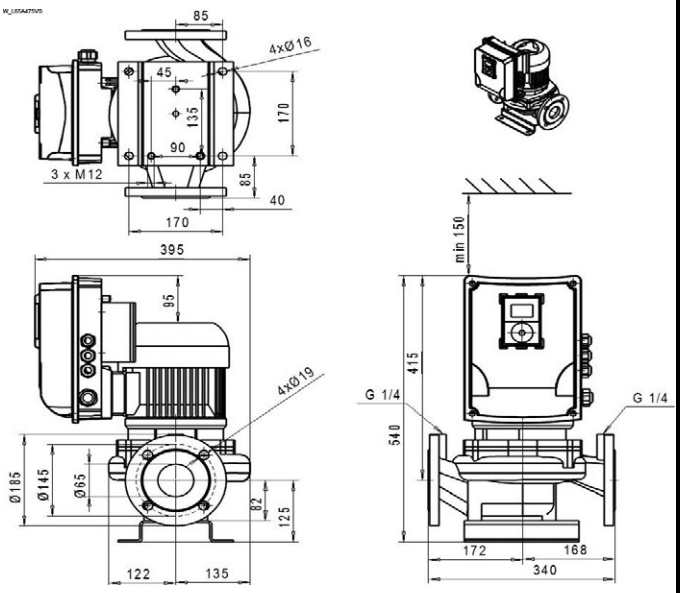

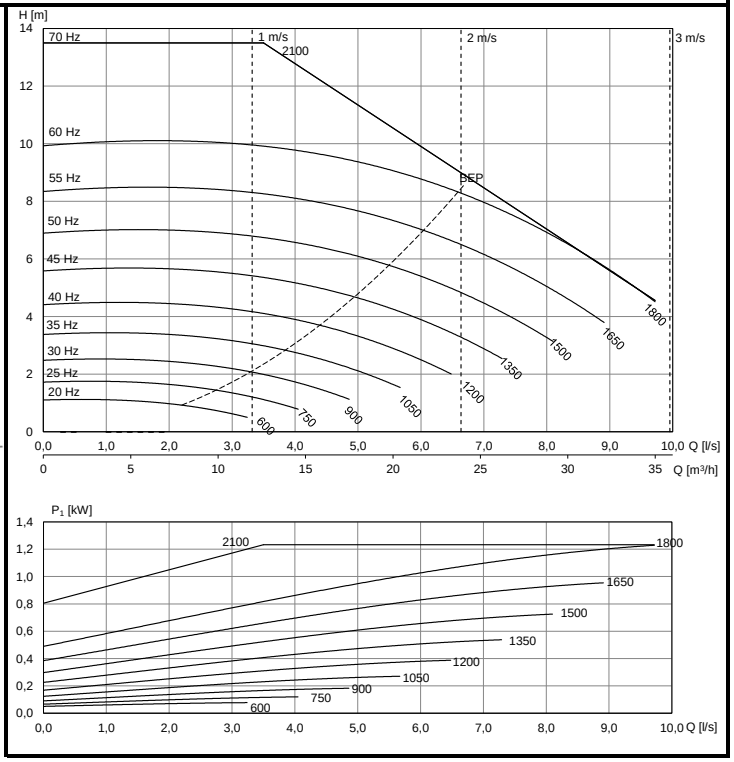

Motor	P_{2N} [kW]	I_N [A] (3x400V)	[kg]
KHVS-100 B2 F15	0,9	3,0	48

L-65A/4 VS | **LH-65A/4 VS**

DN65	600 - 2100 r/min	Ø172	3~ 400 V

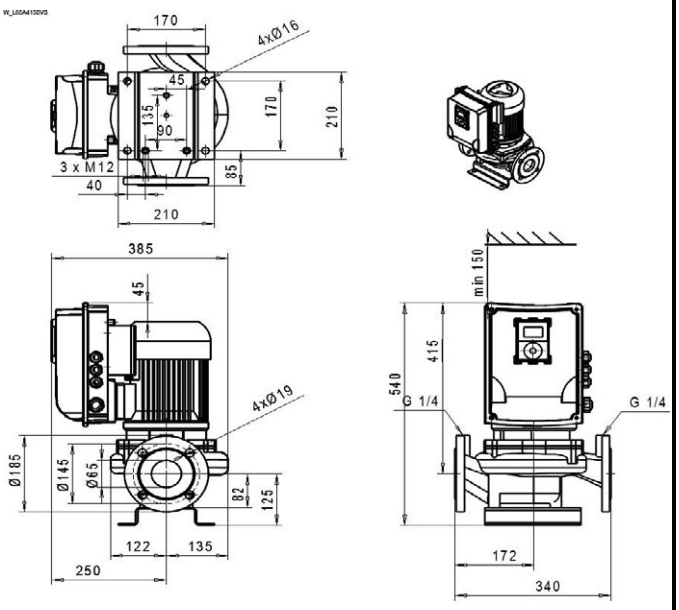

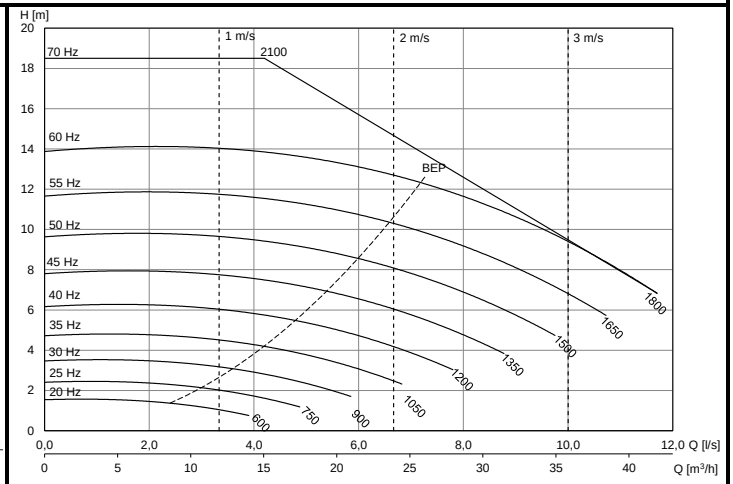

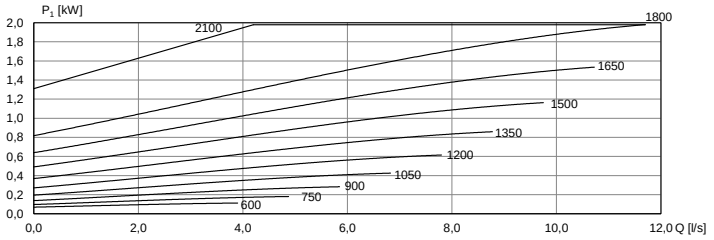

Motor	P_{2N} [kW]	I_N [A] (3x400V)	[kg]
KHVS-101 D2 F19	1,5	4,0	57

L-65A/4 VS | **LH-65A/4 VS**

DN65	600 - 2250 r/min	Ø172	3~ 400 V

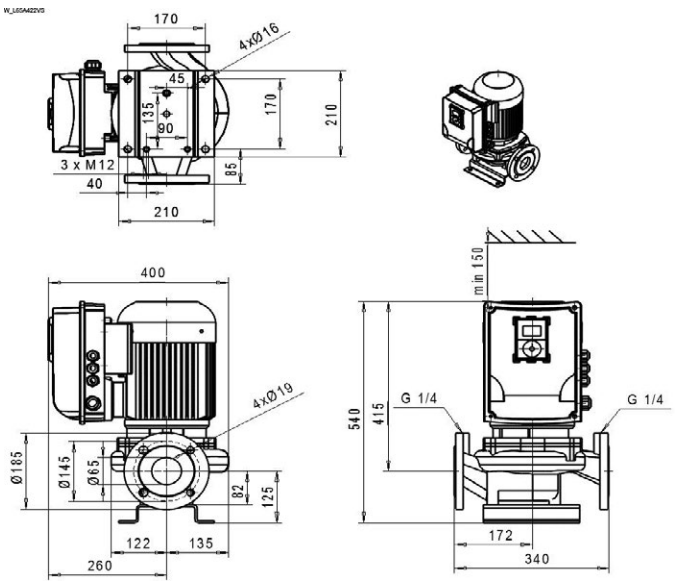

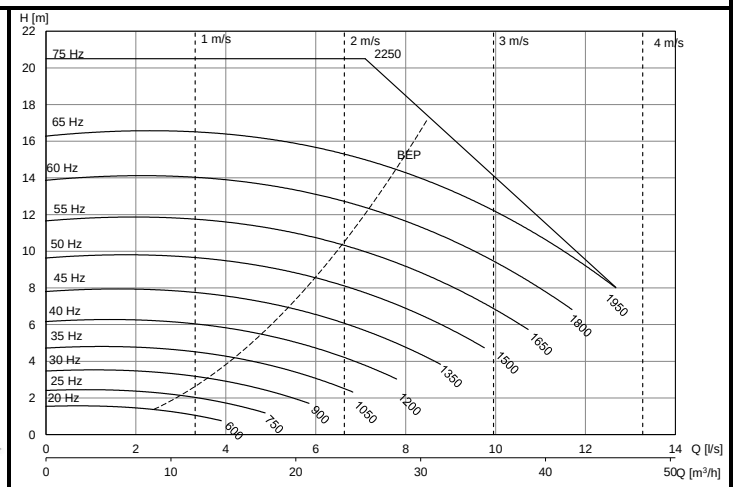

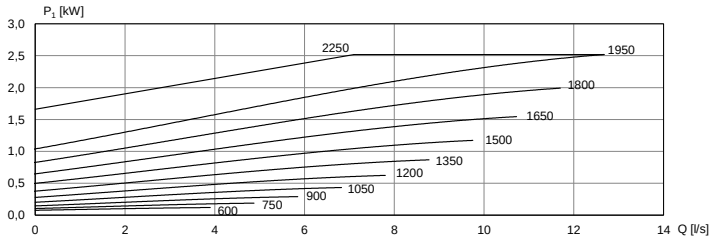

Motor	P_{2N} [kW]	I_N [A] (3x400V)	[kg]
KHVS-112 E2 F19	2,2	7,3	64

L-65A/4 VS | **LH-65A/4 VS**

DN65	600 - 2250 r/min	Ø188	3~ 400 V

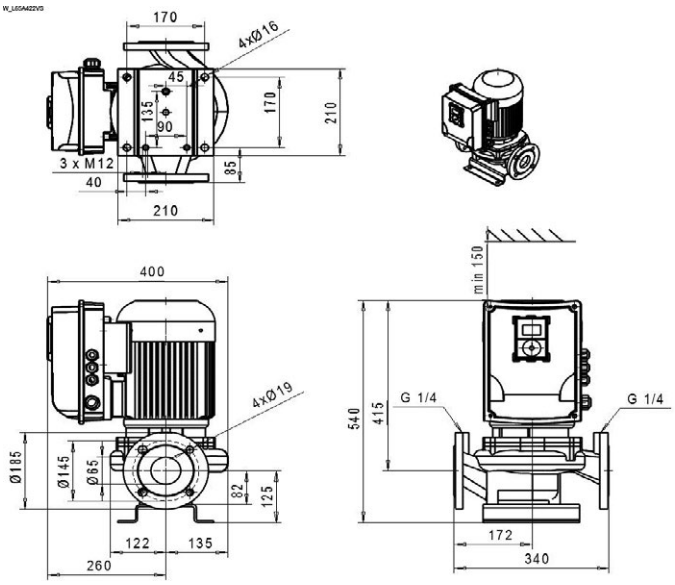

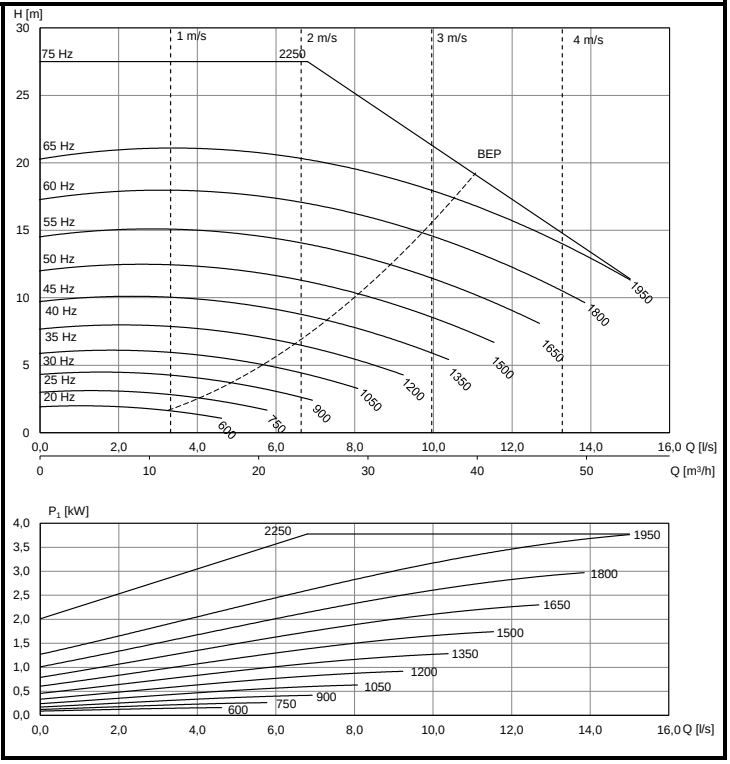

Motor	P_{2N} [kW]	I_N [A] (3x400V)	[kg]
KHVS-112 E2 F19	3,0	9,6	64

L-65B/2 VS | **LH-65B/2 VS** | **LS-65B/2 VS**

DN65	1200 - 3600 r/min	Ø148	3~ 400 V

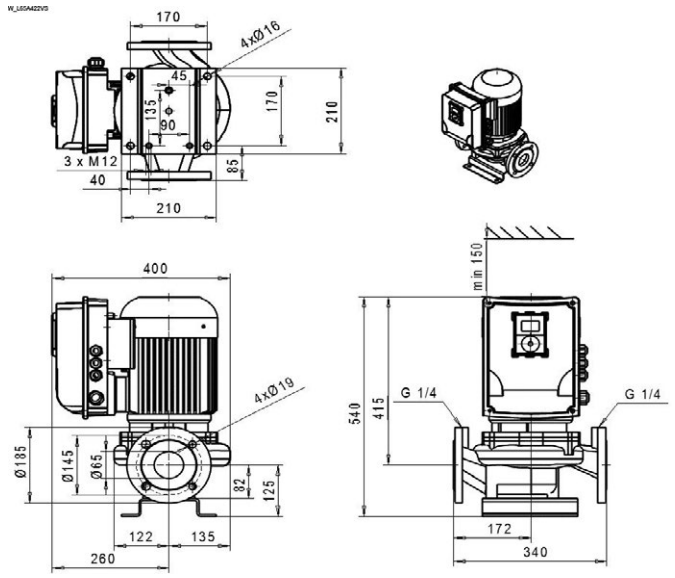

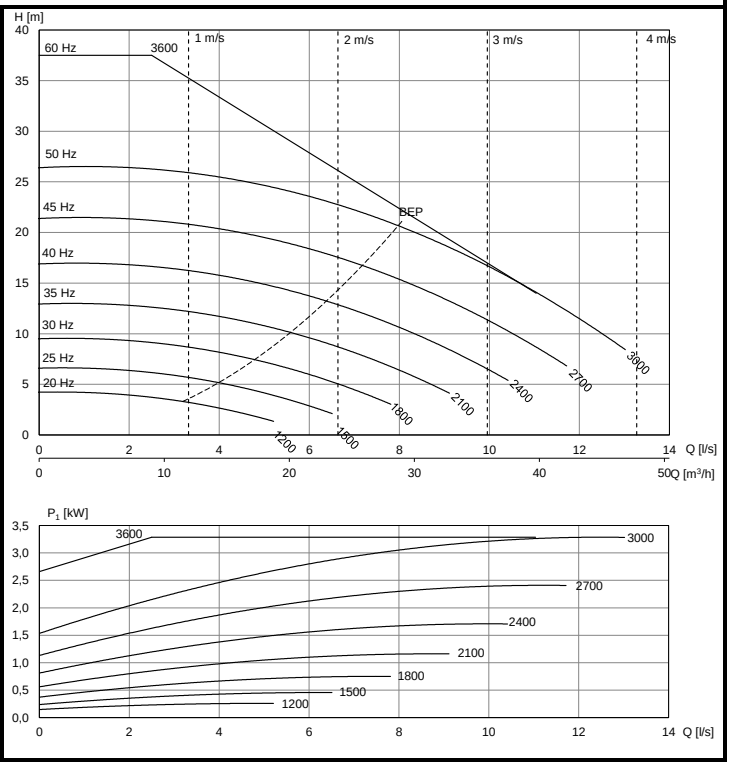

Motor	P_{2N} [kW]	I_N [A] (3x400V)	[kg]
KHVS-112 C1 F19	3	9,6	64

L-65B/2 VS | **LH-65B/2 VS** | **LS-65B/2 VS**

DN65	1200 - 3600 r/min	Ø160	3~ 400 V

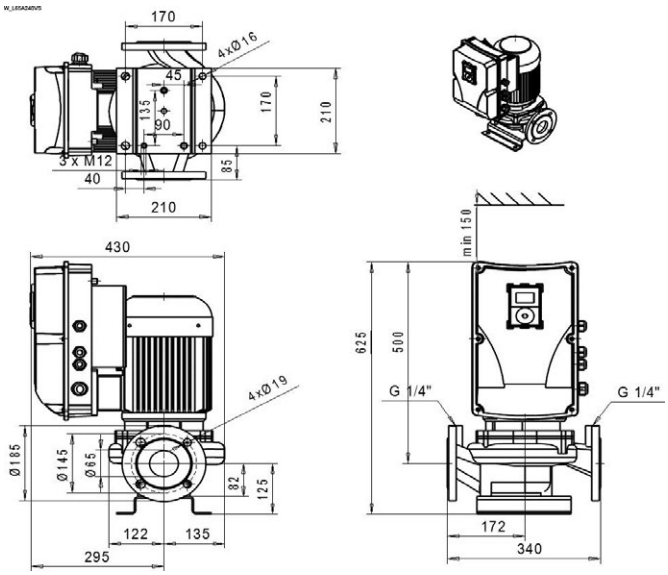

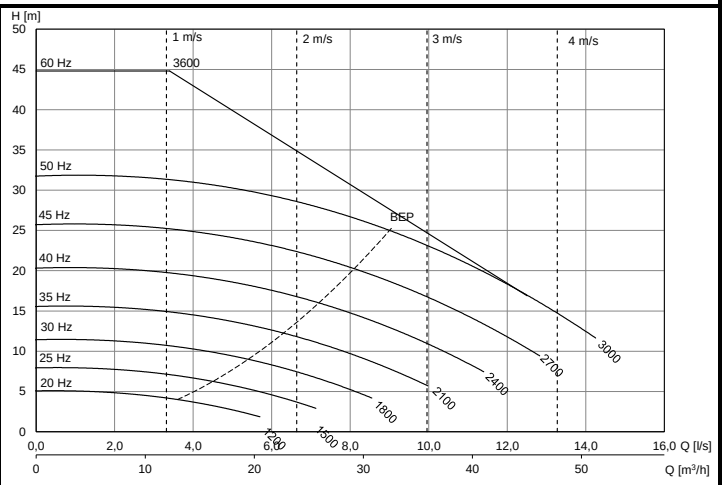

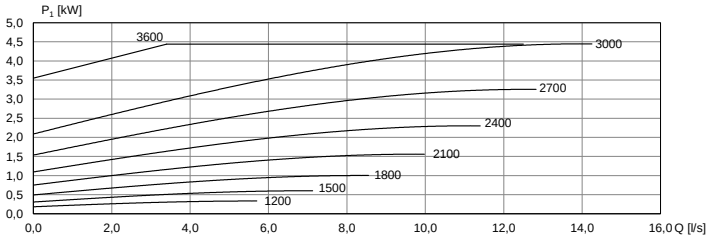

Motor	P_{2N} [kW]	I_N [A] (3x400V)	[kg]
KHVS-112 E1 F19	4	11,5	72

L-65B/2 VS | **LH-65B/2 VS** | **LS-65B/2 VS**

DN65	1200 - 3600 r/min	Ø174	3~ 400 V

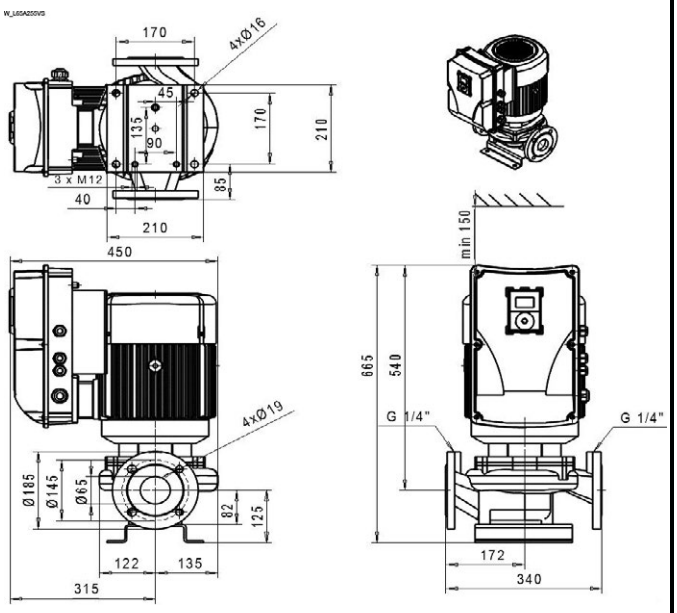

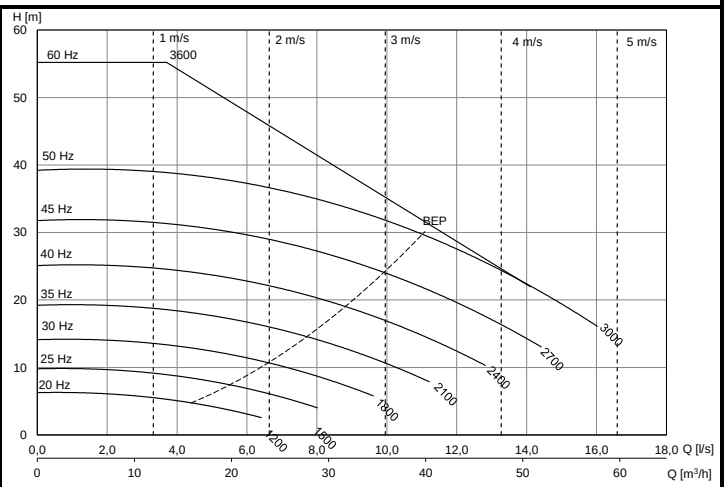

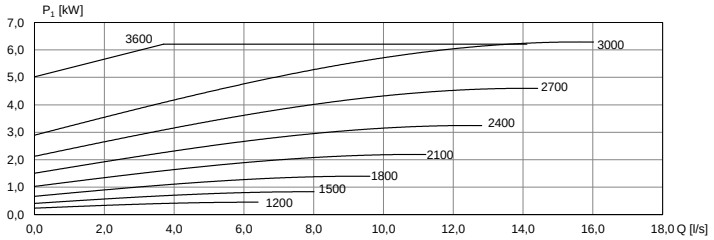

Motor	P_{2N} [kW]	I_N [A] (3x400V)	[kg]
KHVS-132 C1 F19	5,5	14,2	96

L-65B/2 VS | **LH-65B/2 VS** | **LS-65B/2 VS**

DN65	1200 - 3600 r/min	Ø184	3~ 400 V

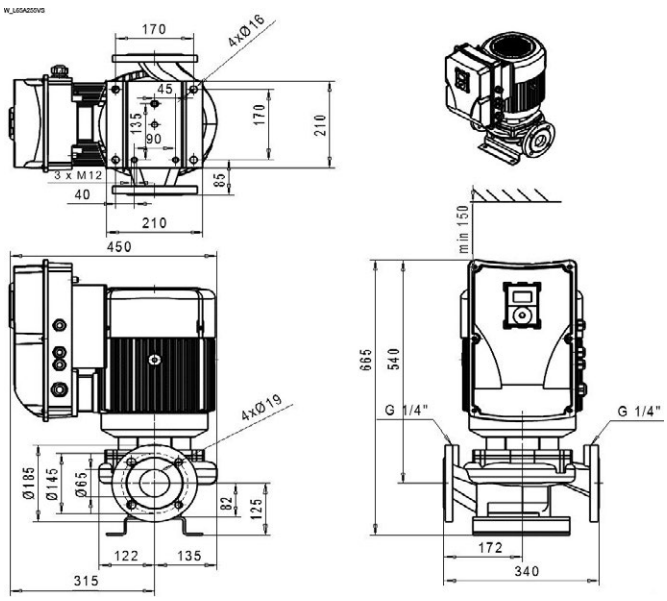

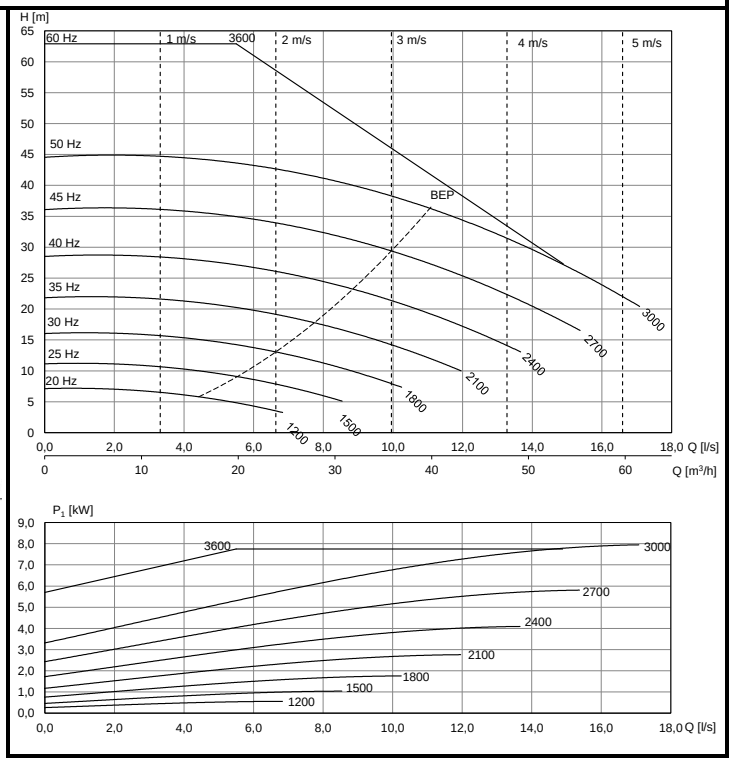

Motor	P_{2N} [kW]	I_N [A] (3x400V)	[kg]
KHVS-132 E1 F19	7,5	20,0	104

L-80A/4 VS | **LH-80A/4 VS**

DN80	600 - 1500 r/min	Ø158	3~ 400 V

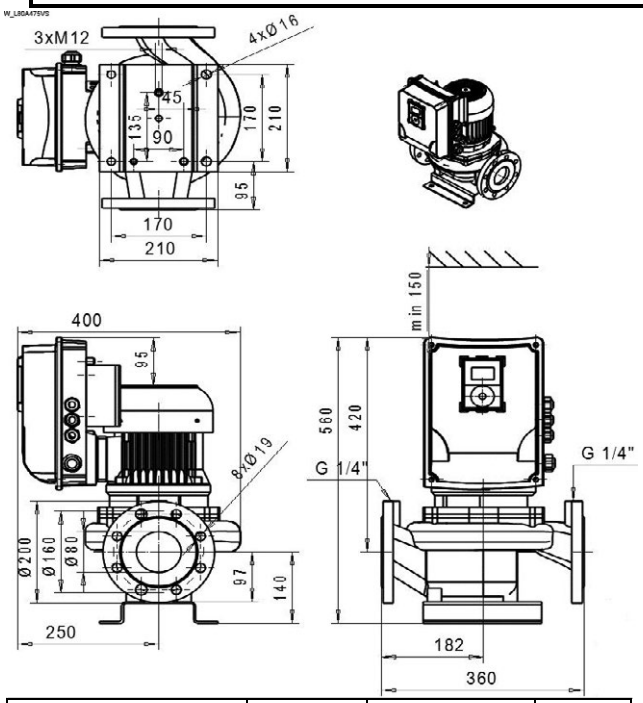

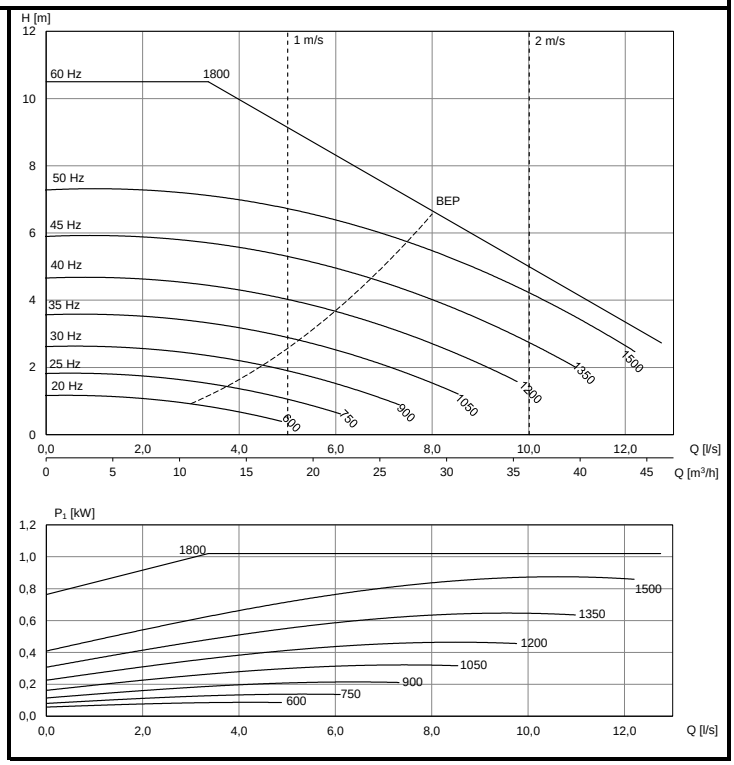

Motor	P_{2N} [kW]	I_N [A] (3x400V)	[kg]
KHVS-100 B2 F19	0,75	3,0	52

L-80A/4 VS | **LH-80A/4 VS**

DN80	600 - 1800 r/min	Ø188	3~ 400 V

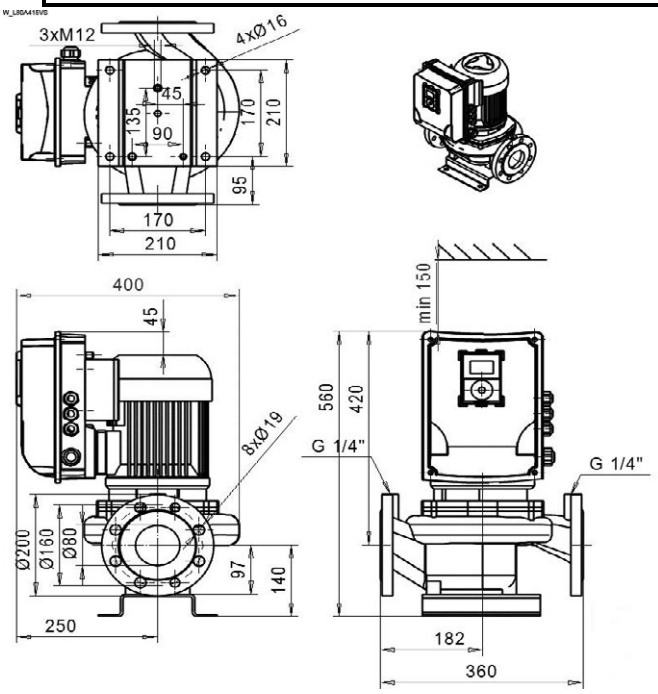

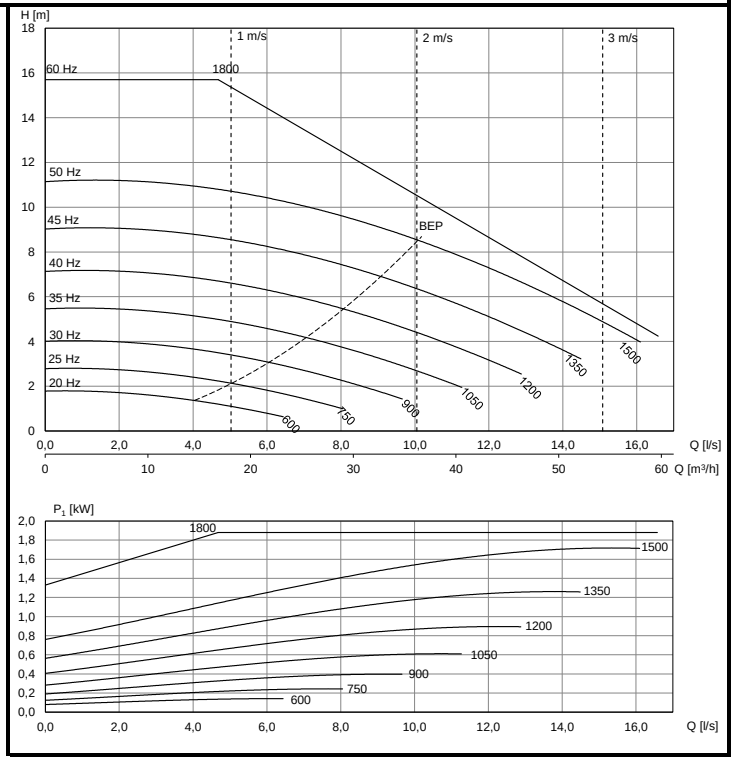

Motor	P_{2N} [kW]	I_N [A] (3x400V)	[kg]
KHVS-101 D2 F19	1,5	4,0	60

L-80A/4 VS | **LH-80A/4 VS**

DN80	600 - 2250 r/min	Ø176	3~ 400 V

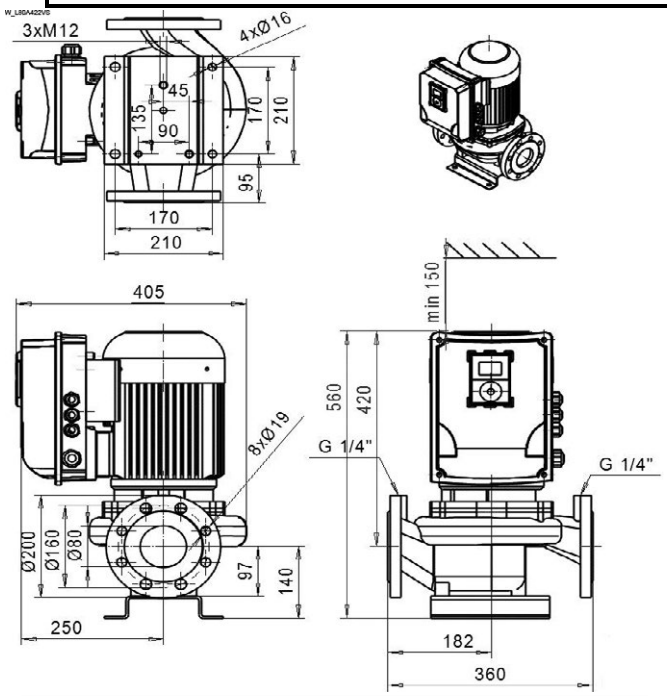

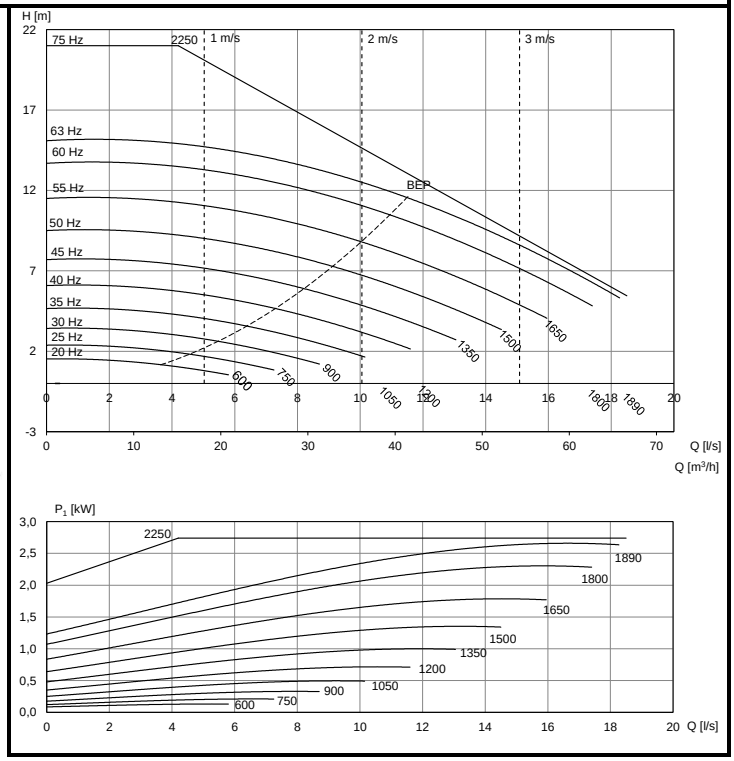

Motor	P_{2N} [kW]	I_N [A] (3x400V)	[kg]
KHVS-112 E2 F19	2,2	7,3	66

L-80A/4 VS | **LH-80A/4 VS**

DN80	600 - 2250 r/min	Ø188	3~ 400 V

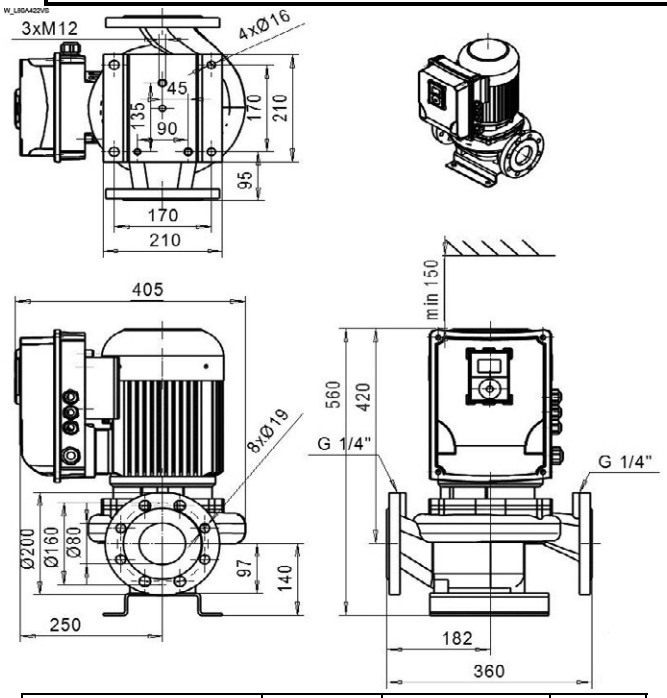

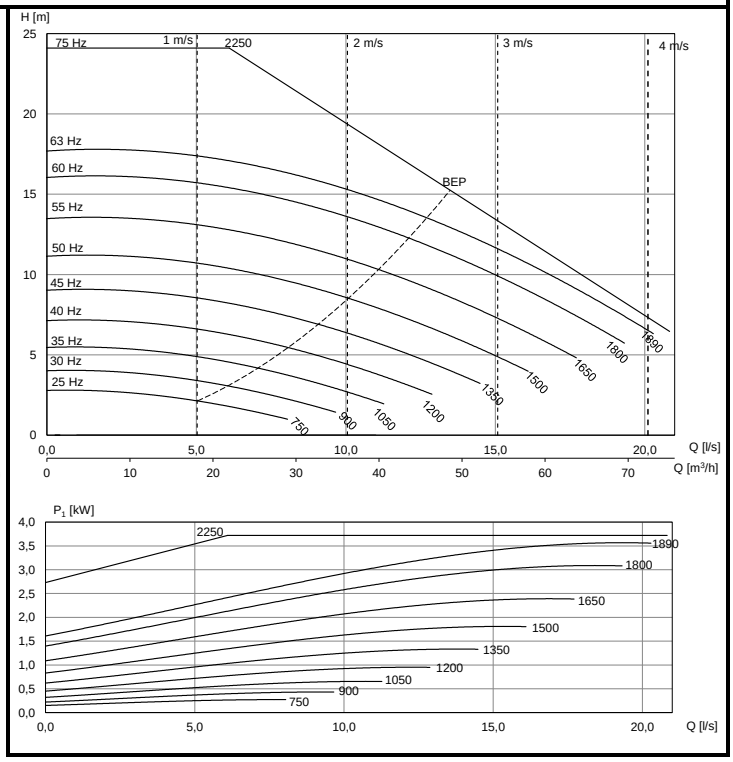

Motor	P_{2N} [kW]	I_N [A] (3x400V)	[kg]
KHVS-112 E2 F19	3,0	9,6	66

L-80A/2 VS | **LH-80A/2 VS**

DN80	1200 - 3600 r/min	Ø141	3~ 400 V

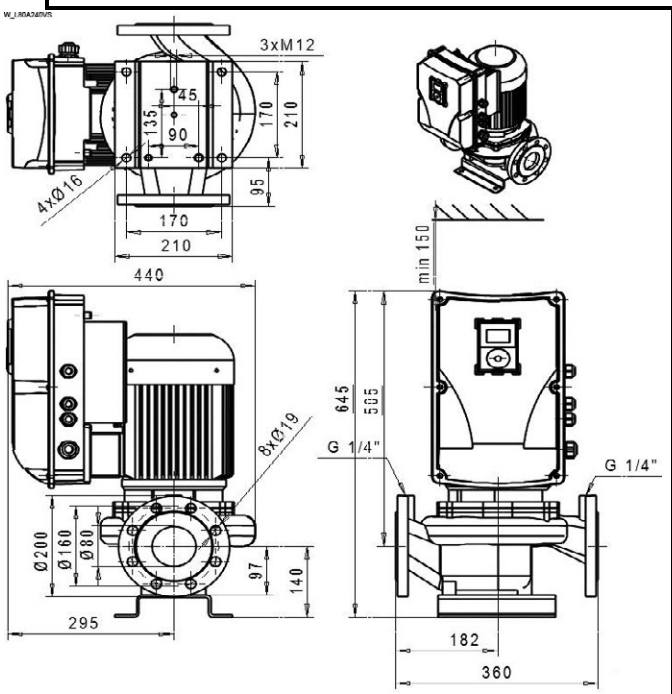

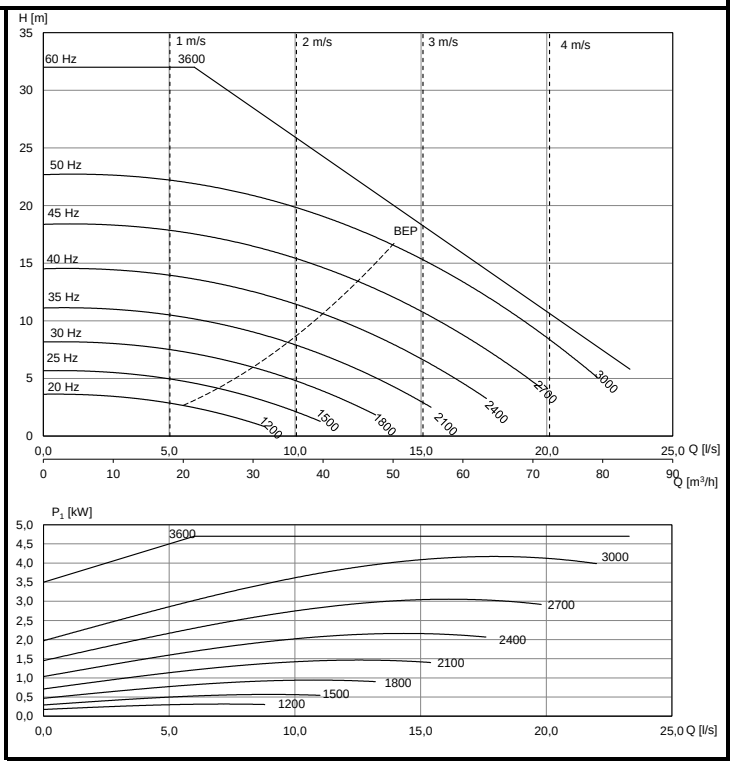

Motor	P_{2N} [kW]	I_N [A] (3x400V)	[kg]
KHVS-112 E1 F19	4	11,5	73

L-80A/2 VS | **LH-80A/2 VS**

DN80	1200 - 3600 r/min	Ø156	3~ 400 V

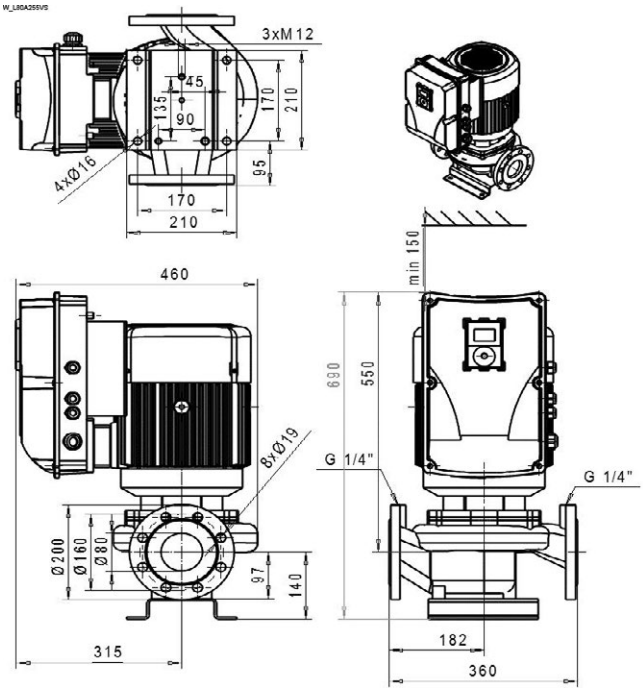

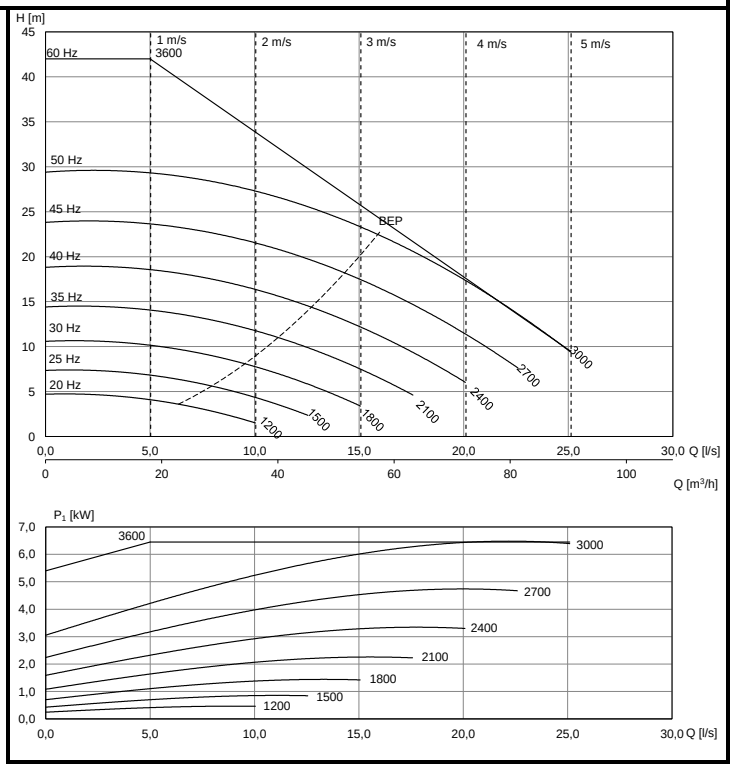

Motor	P_{2N} [kW]	I_N [A] (3x400V)	[kg]
KHVS-132 C1 F19	5,5	14,2	97

L-80A/2 VS | **LH-80A/2 VS**

DN80	1200 - 3600 r/min	Ø166	3~ 400 V

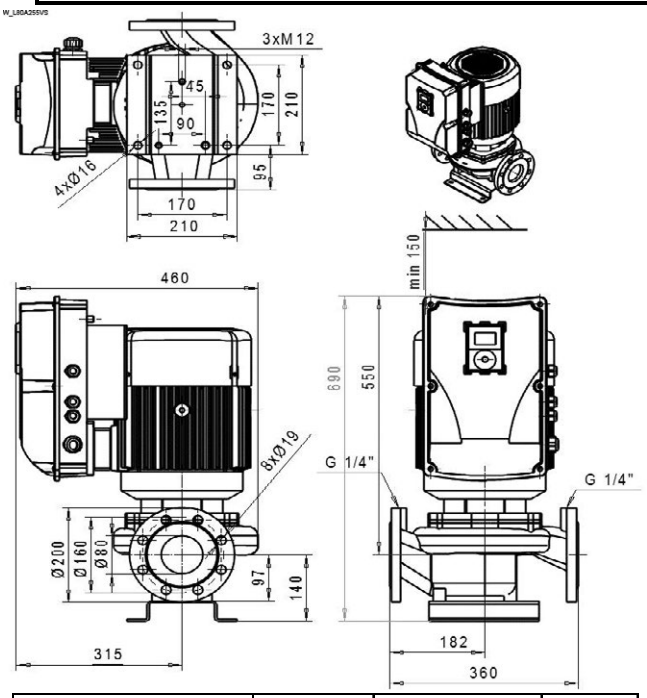

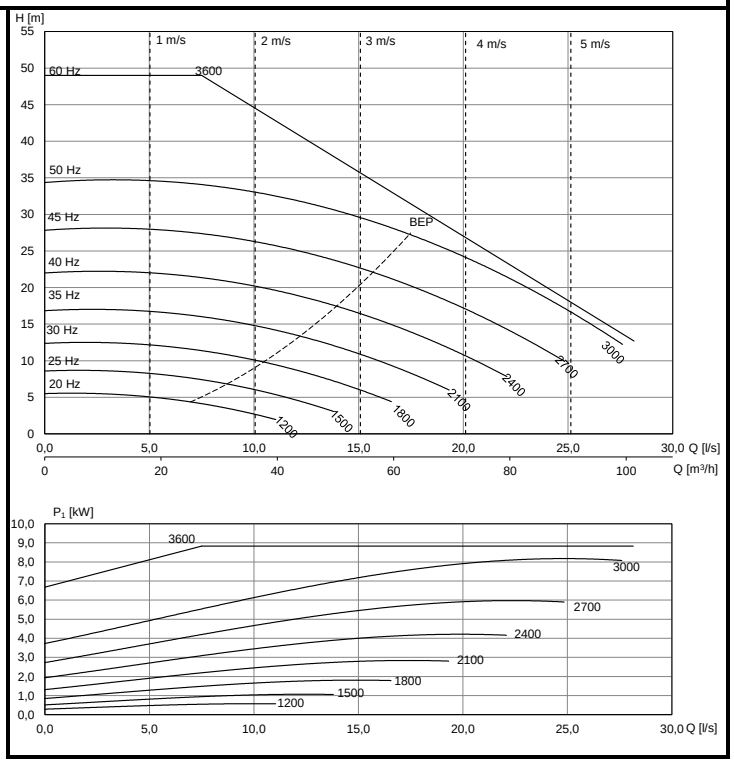

Motor	P_{2N} [kW]	I_N [A] (3x400V)	[kg]
KHVS-132 E1 F19	7,5	20,0	105

AL-1102/4 VS **ALH-1102/4 VS** **ALP-1102/4 VS** **ALS-1102/4 VS**

DN100	600 - 1650 r/min	Ø142	3~ 400 V

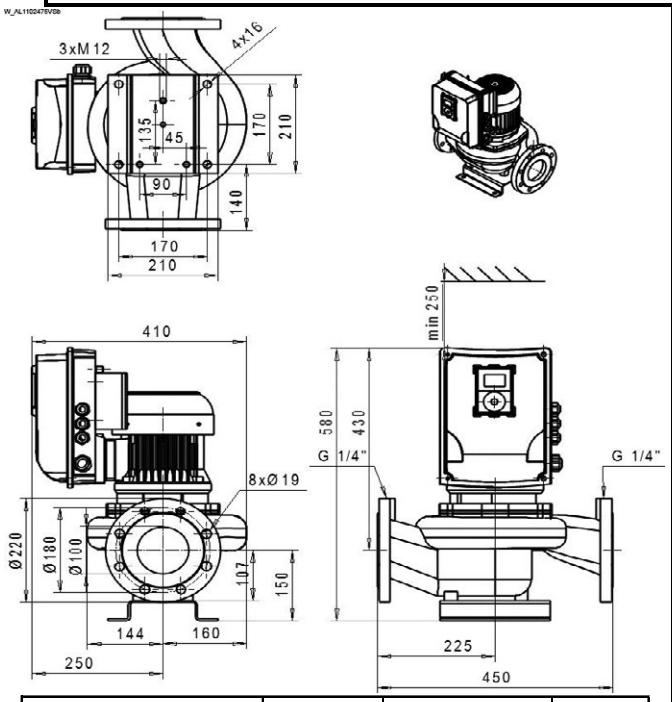

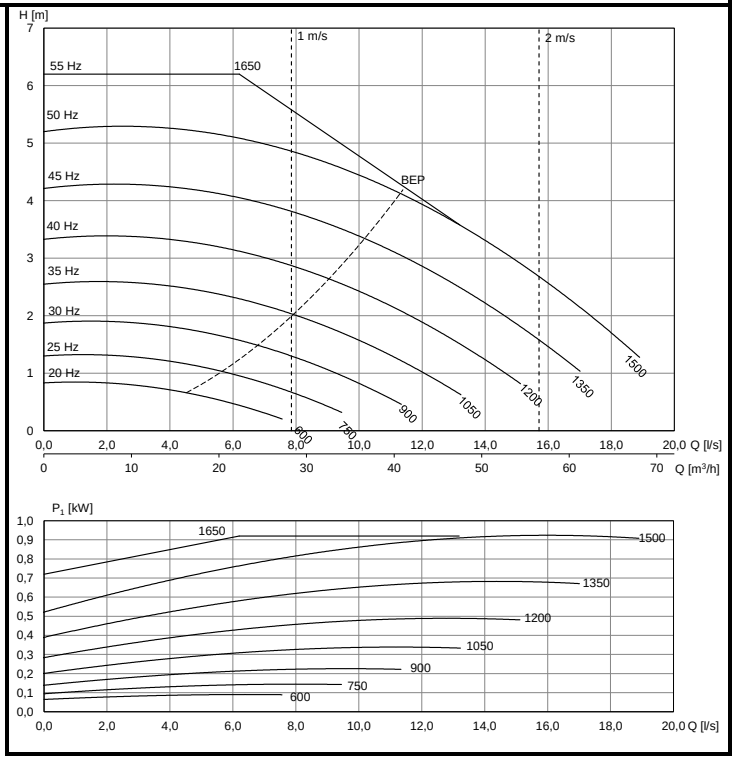

Motor	P_{2N} [kW]	I_N [A] (3x400V)	[kg]
KHVS-100 B2 F19	0,75	3,0	66

AL-1102/4 VS **ALH-1102/4 VS** **ALP-1102/4 VS** **ALS-1102/4 VS**

DN100	600 - 1650 r/min	Ø172	3~ 400 V

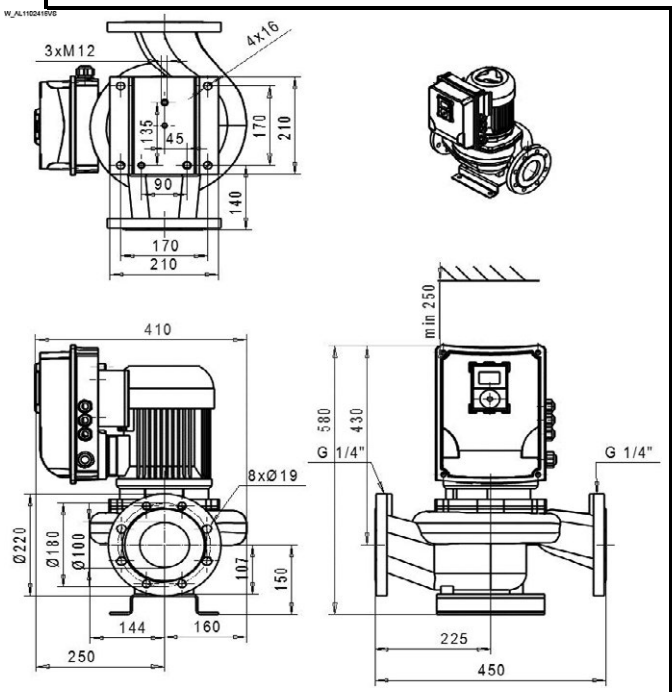

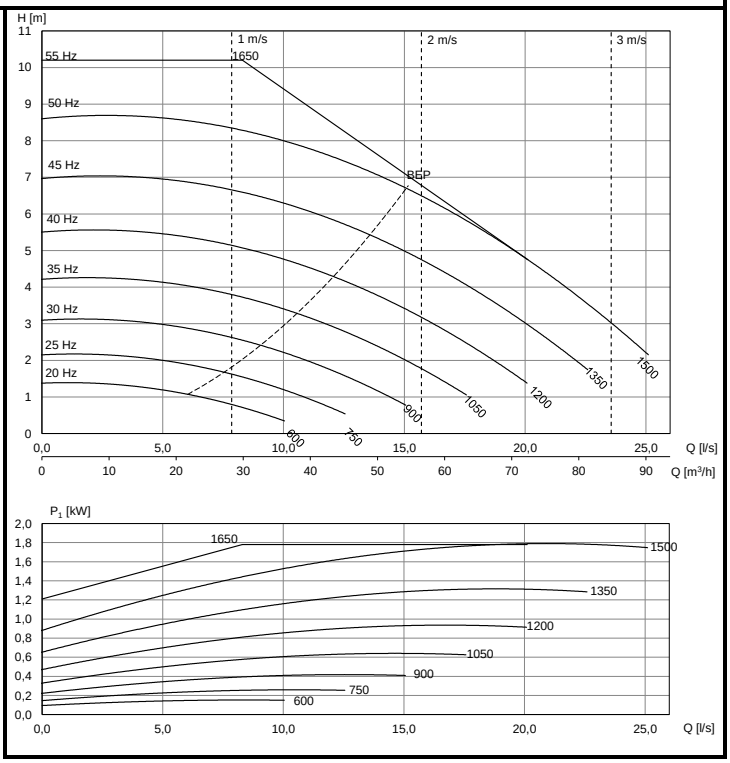

Motor	P_{2N} [kW]	I_N [A] (3x400V)	[kg]
KHVS-101 D2 F19	1,5	4,0	69

AL-1102/4 VS **ALH-1102/4 VS** **ALP-1102/4 VS** **ALS-1102/4 VS**

DN100	600 - 1650 r/min	Ø188	3~ 400 V

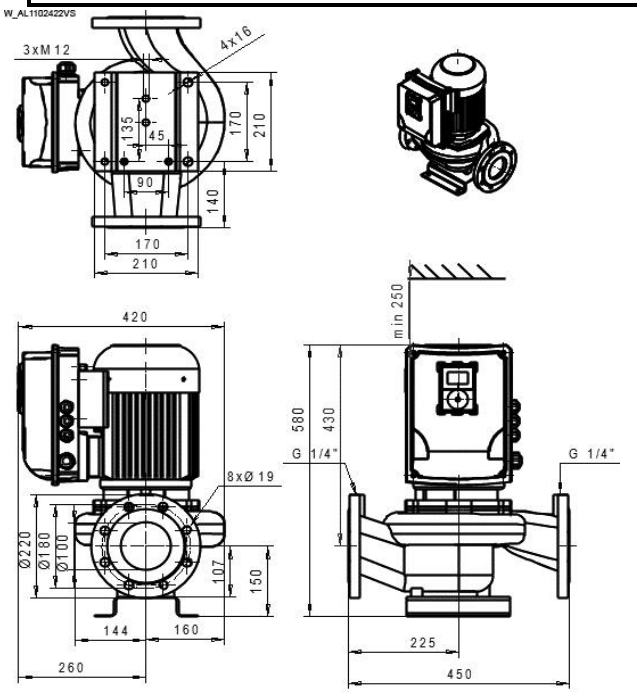

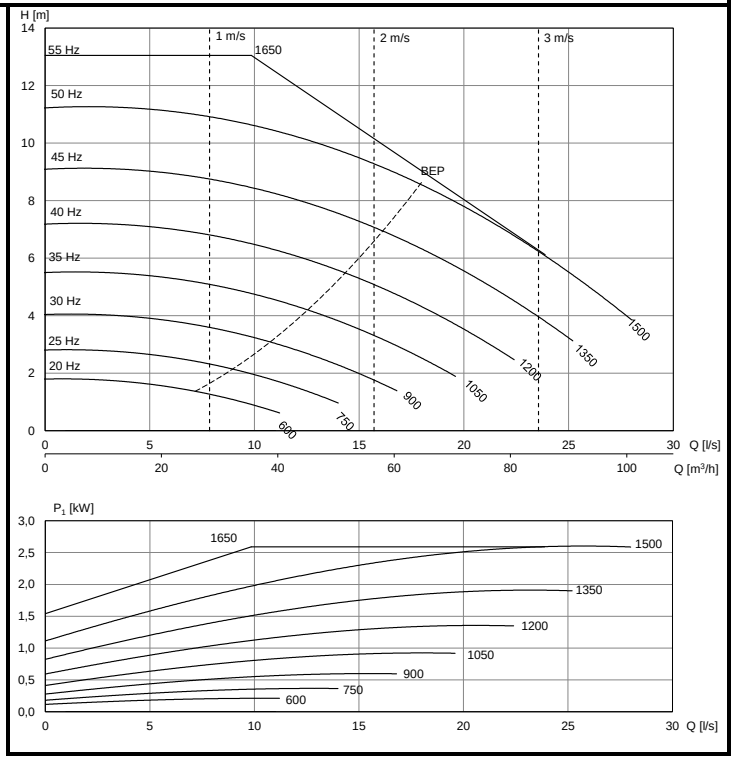

Motor	P_{2N} [kW]	I_N [A] (3x400V)	[kg]
KHVS-112 E2 F19	2,2	7,30	75

AL-1102/4 VS **ALH-1102/4 VS** **ALP-1102/4 VS** **ALS-1102/4 VS**

DN100	600 - 1950 r/min	Ø181	3~ 400 V

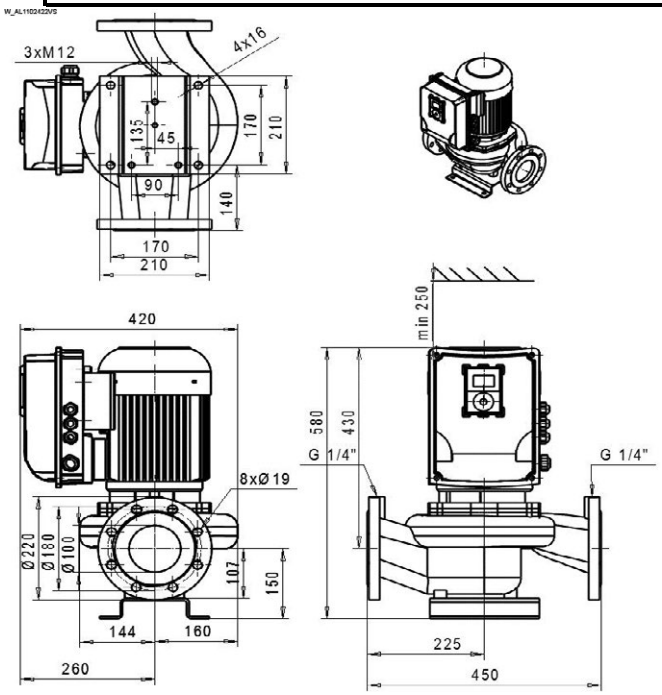

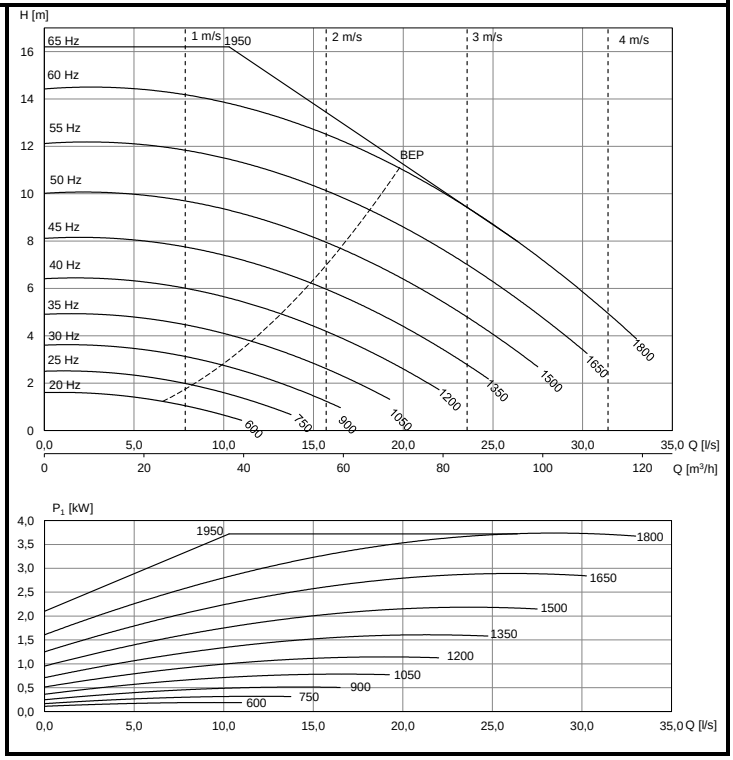

Motor	P_{2N} [kW]	I_N [A] (3x400V)	[kg]
KHVS-112 E2 F19	3	9,6	75

AL-1102/2 VS **ALH-1102/2 VS** **ALP-1102/2 VS** **ALS-1102/2 VS**

DN100	1200 - 3000 r/min	Ø128	3~ 400 V

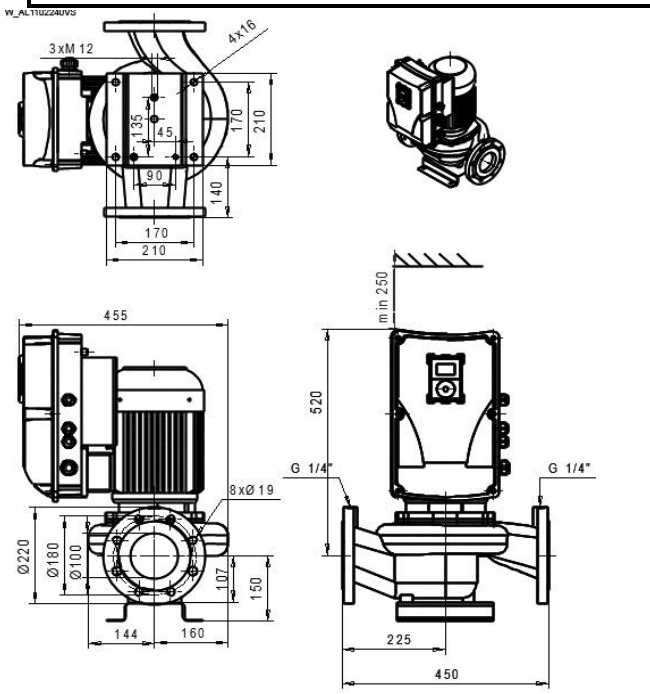

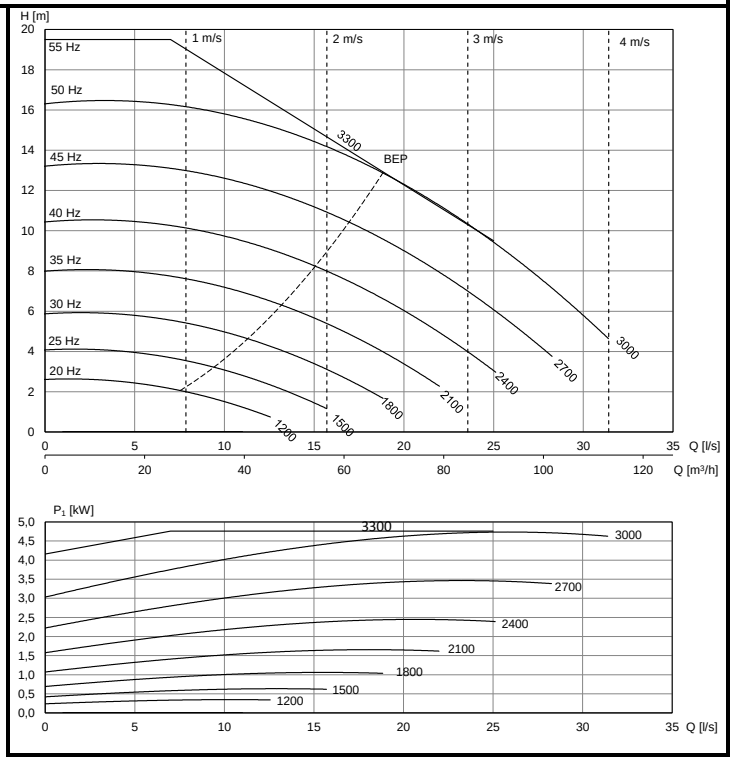

Motor	P_{2N} [kW]	I_N [A] (3x400V)	[kg]
KHVS-112 E1 F19	4	11,5	83

AL-1102/2 VS **ALH-1102/2 VS** **ALP-1102/2 VS** **ALS-1102/2 VS**

DN100	1200 - 3300 r/min	Ø138	3~ 400 V

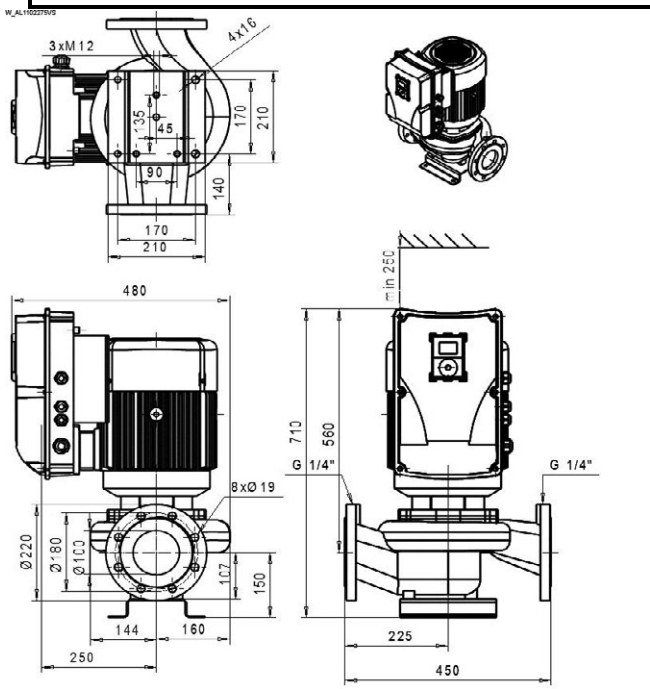

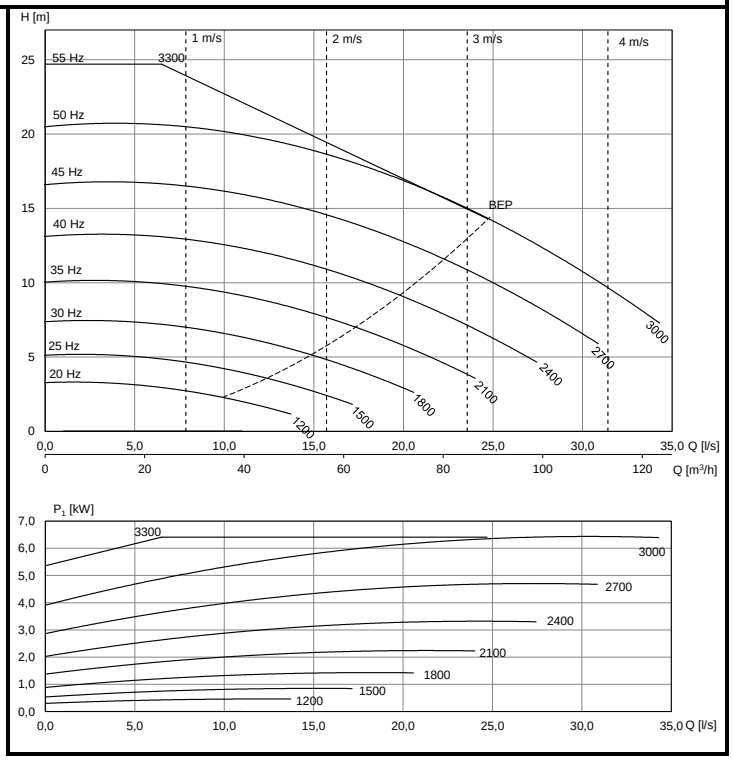

Motor	P_{2N} [kW]	I_N [A] (3x400V)	[kg]
KHVS-132 C1 F19	5,5	14,2	107

AL-1102/2 VS | **ALH-1102/2 VS** | **ALP-1102/2 VS** | **ALS-1102/2 VS**

DN100	1200 - 3300 r/min	Ø149	3~ 400 V

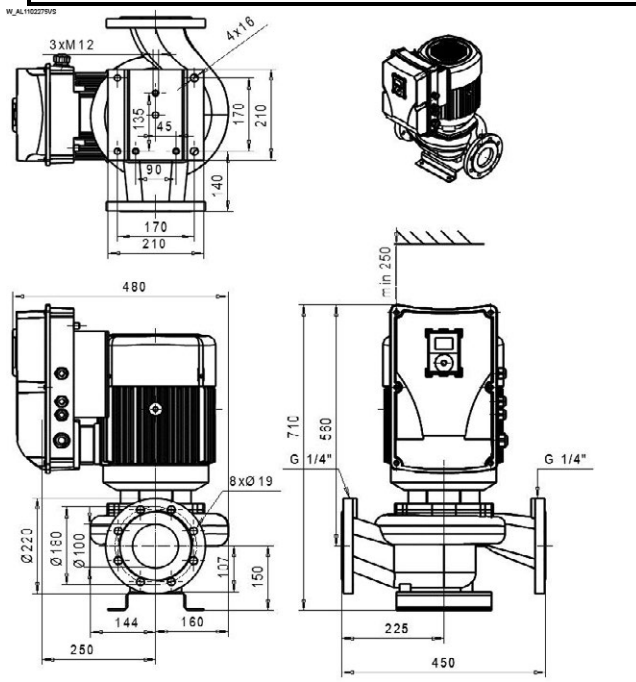

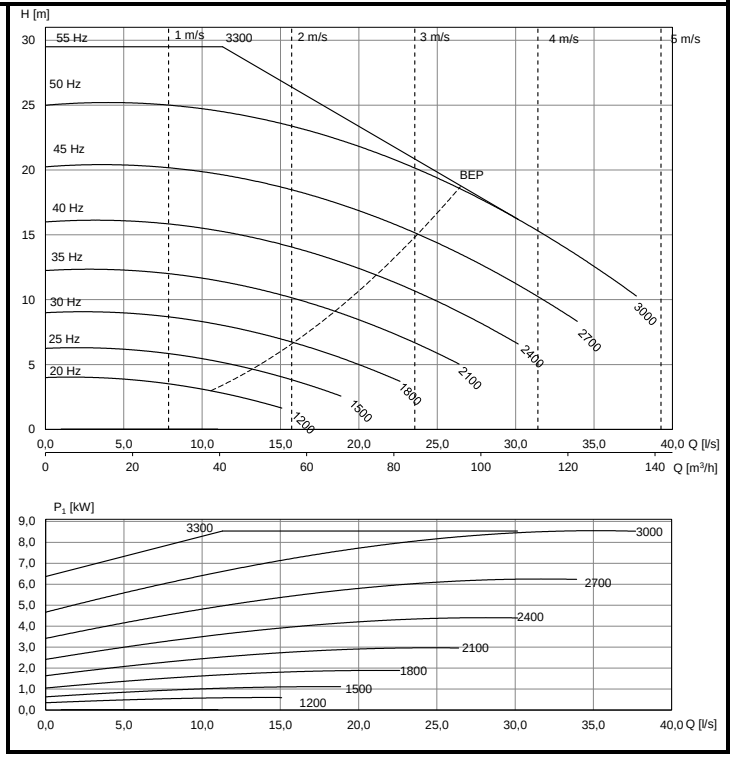

Motor	P_{2N} [kW]	I_N [A] (3x400V)	[kg]
KPVS-132 E1 F19	7,5	20,0	114

L-100S/4 VS | **LH-100S/4 VS** | **LP-100S/4 VS**

DN100	600 - 1800 r/min	Ø225	3~ 400 V

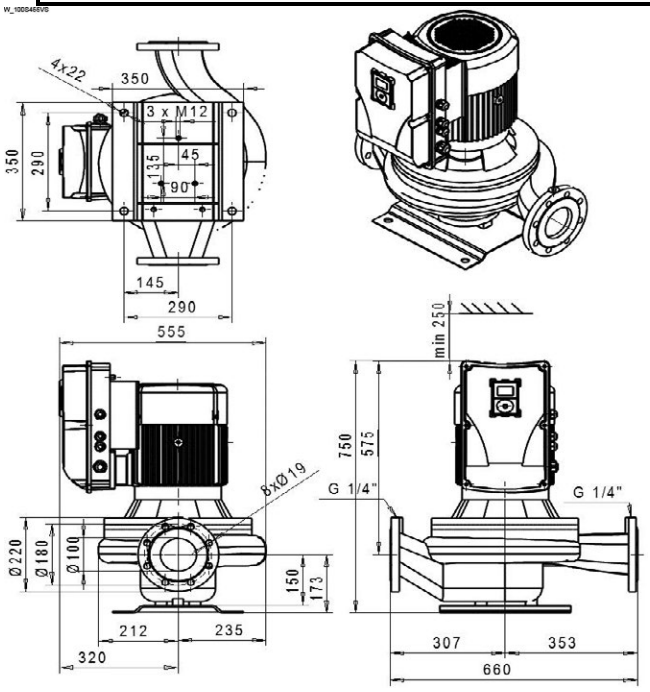

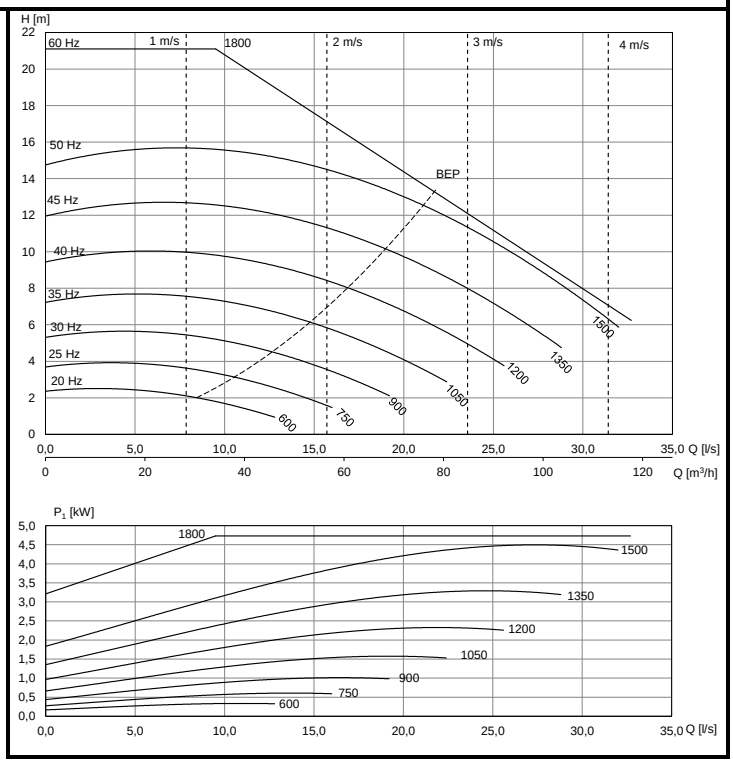

Motor	P_{2N} [kW]	I_N [A] (3x400V)	[kg]
KHVS-132 C2 F31	4	11,5	175

L-100S/4 VS | **LH-100S/4 VS** | **LP-100S/4 VS**

DN100	600 - 1800 r/min	Ø247	3~ 400 V

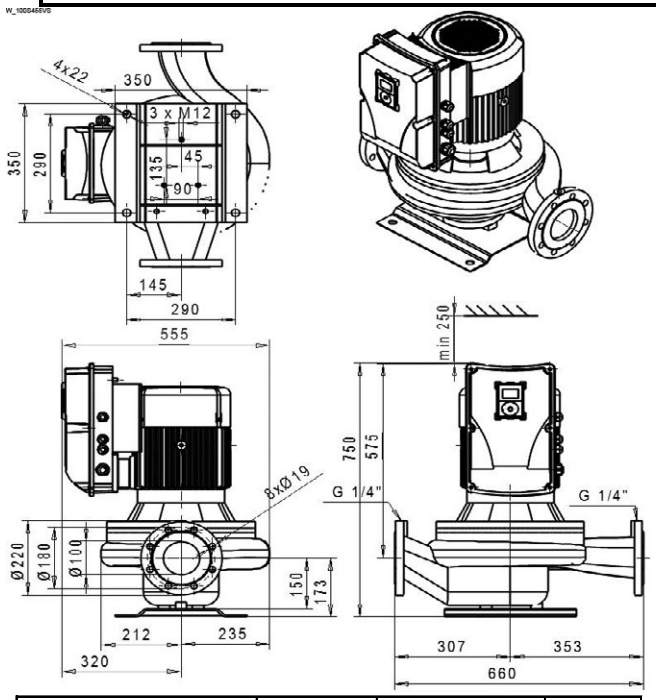

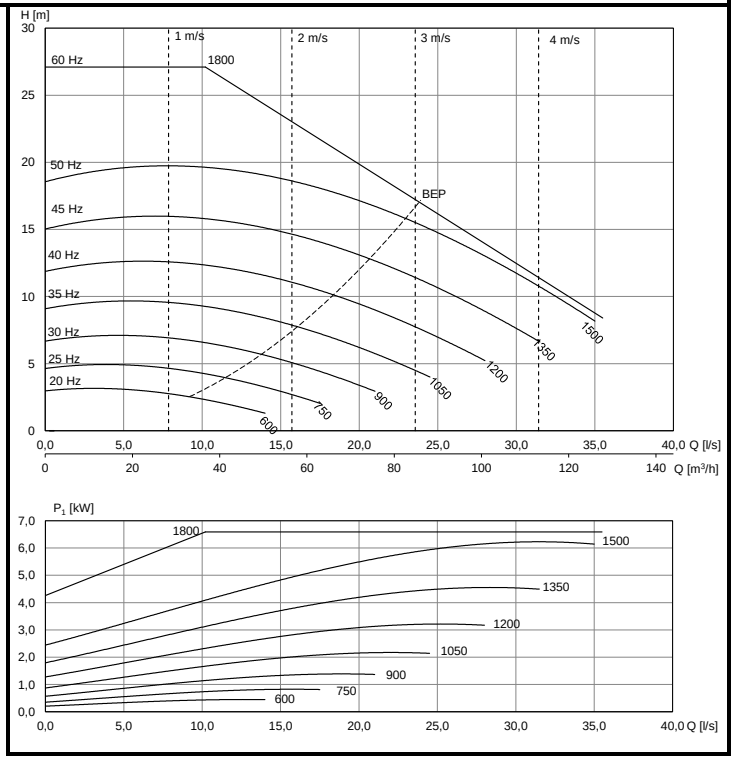

Motor	P_{2N} [kW]	I_N [A] (3x400V)	[kg]
KHVS-132 E2 F31	5,5	14,2	185

L-100S/4 VS | **LH-100S/4 VS** | **LP-100S/4 VS**

DN100	600 - 1800 r/min	Ø270	3~ 400 V

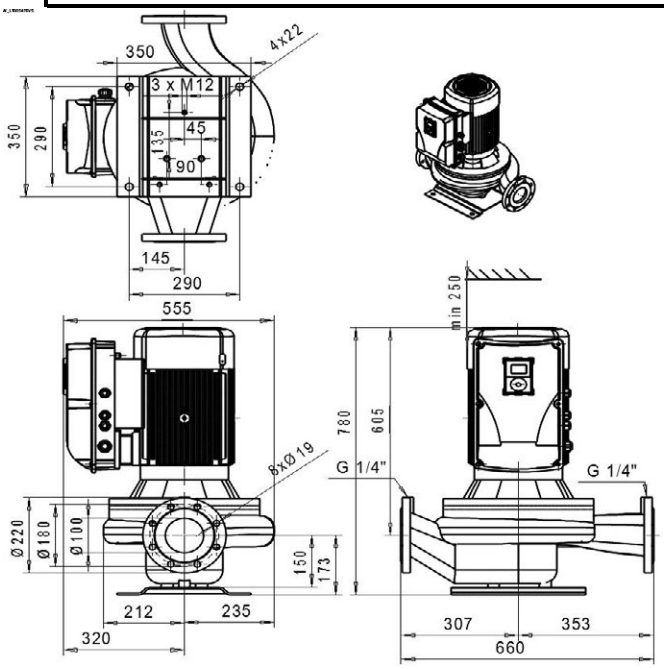

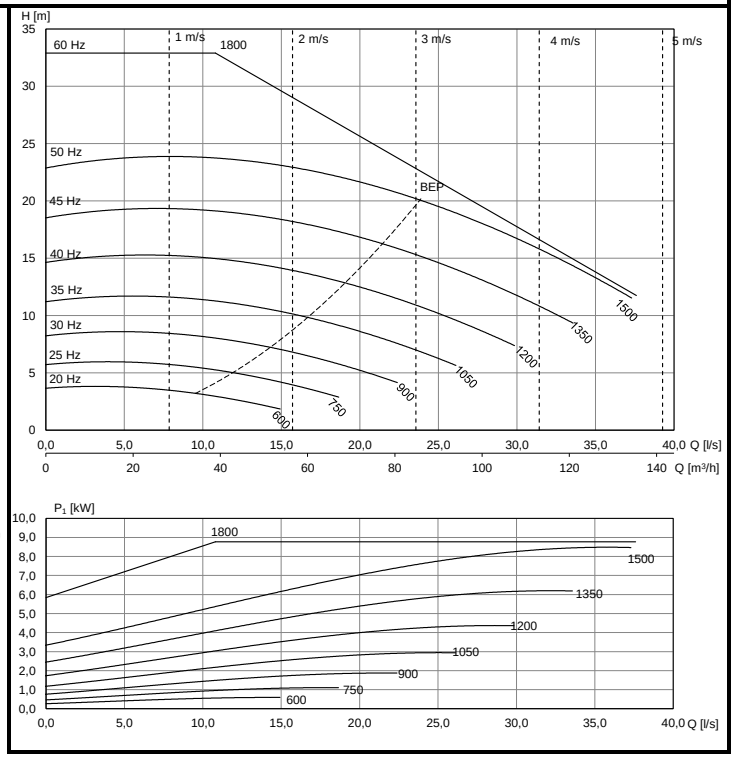

Motor	P_{2N} [kW]	I_N [A] (3x400V)	[kg]
KPVS-134 H2 F31	7,5	20,0	210

AL-1129/4 VS **ALH-1129/4 VS** **ALS-1129/4 VS**

DN125	600 - 1800 r/min	Ø200	3~ 400 V

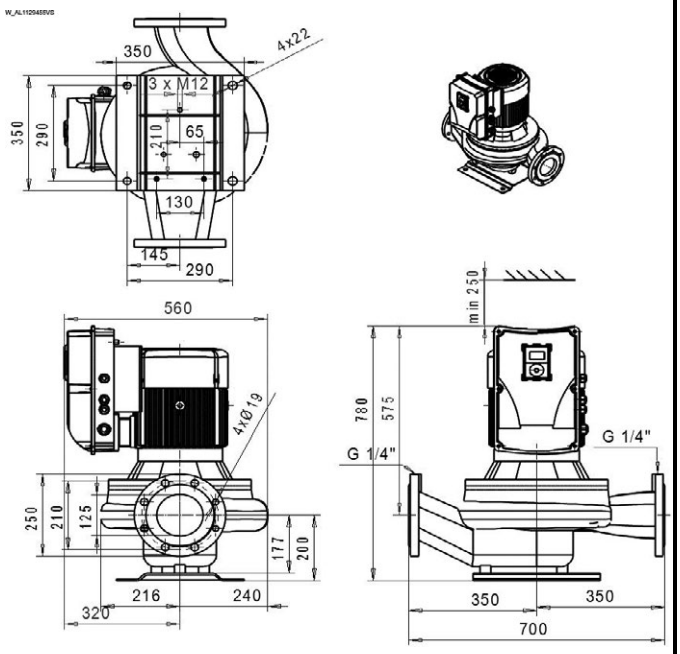

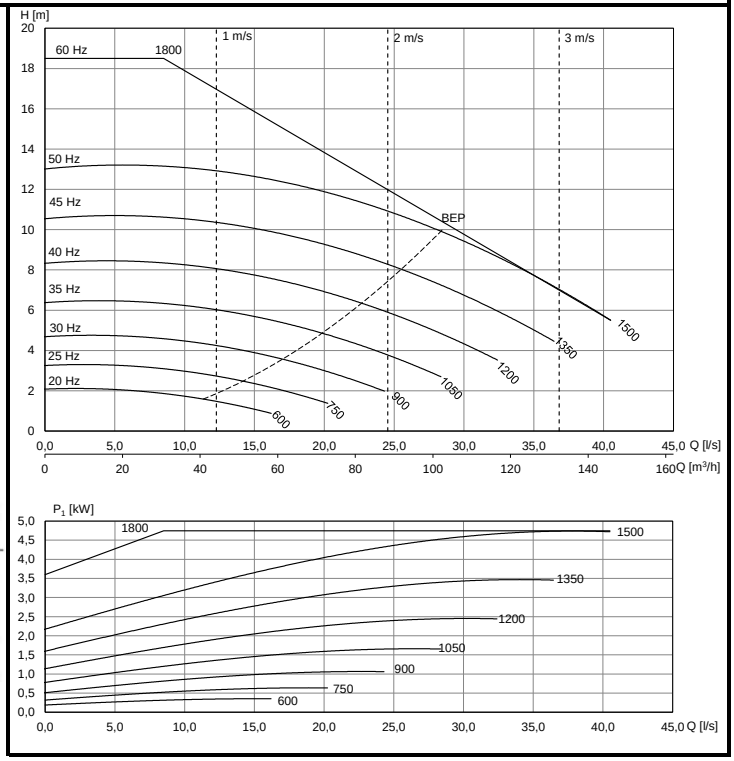

Motor	P_{2N} [kW]	I_N [A] (3x400V)	[kg]
KHVS-132 C2 F31	4	11,5	174

AL-1129/4 VS **ALH-1129/4 VS** **ALS-1129/4 VS**

DN125	600 - 1800 r/min	Ø222	3~ 400 V

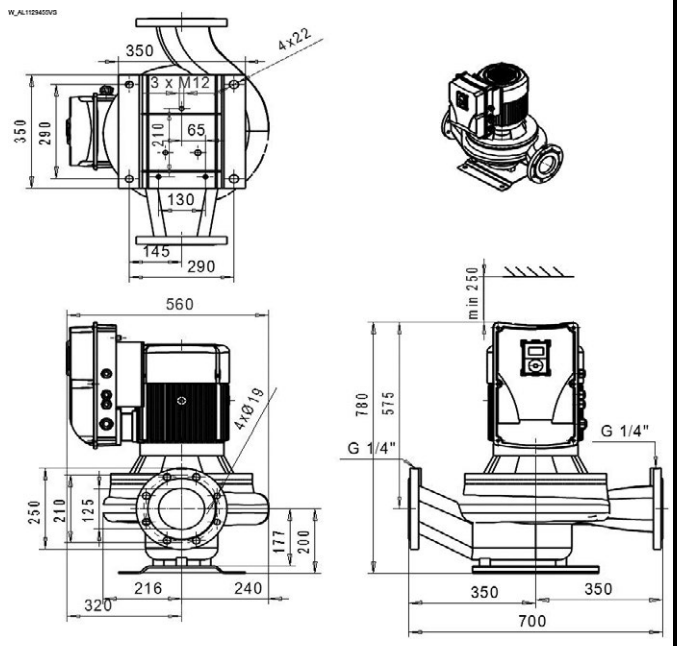

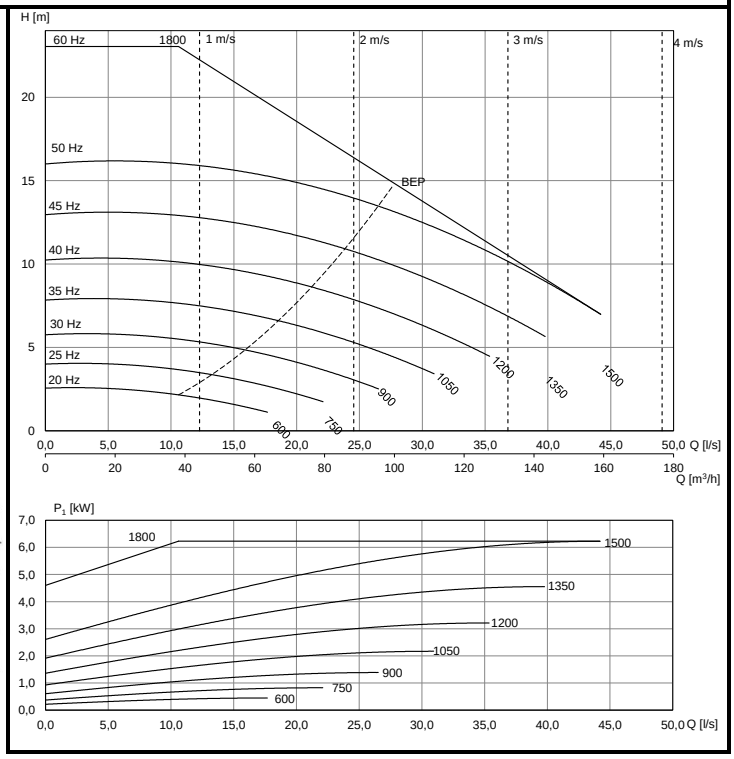

Motor	P_{2N} [kW]	I_N [A] (3x400V)	[kg]
KHVS-132 E2 F31	5,5	14,2	181

AL-1129/4 VS | **ALH-1129/4 VS** | **ALS-1129/4 VS**

DN125	600 - 1800 r/min	Ø242	3~ 400 V

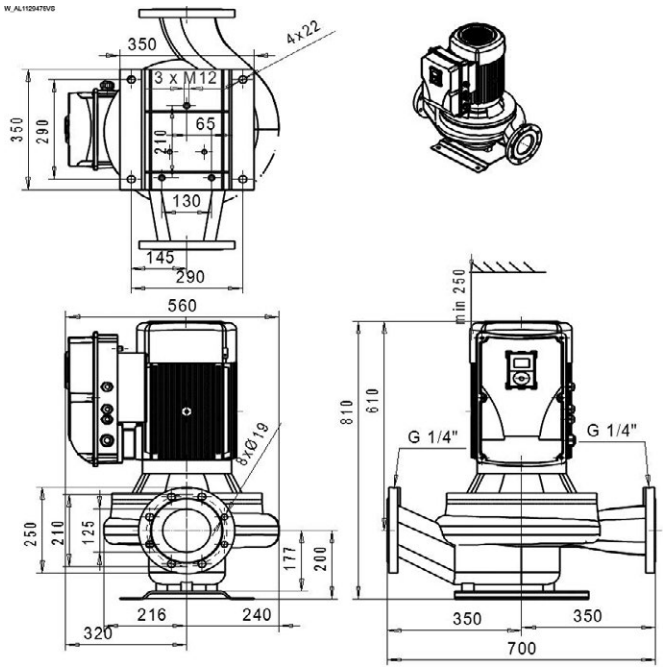

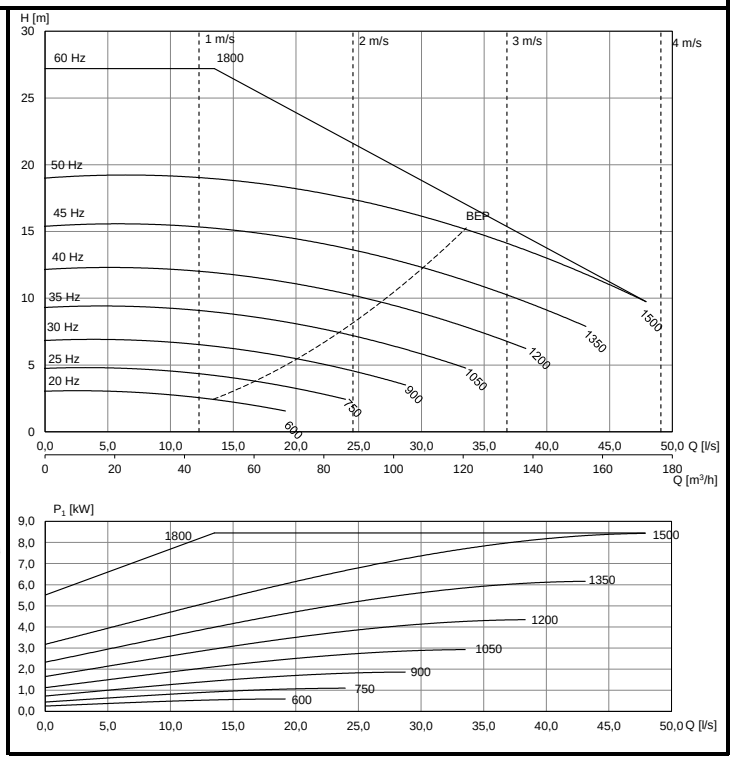

Motor	P_{2N} [kW]	I_N [A] (3x400V)	[kg]
KPVS-134 H2 F31	7,5	20,0	208

AL-1154/4 VS | **ALH-1154/4 VS** | **ALS-1154/4 VS**

DN150	600 - 1650 r/min	Ø240	3~ 400 V

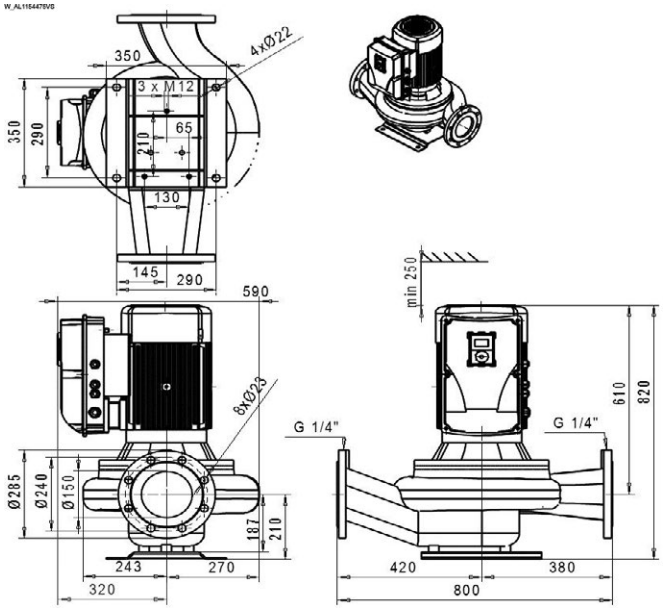

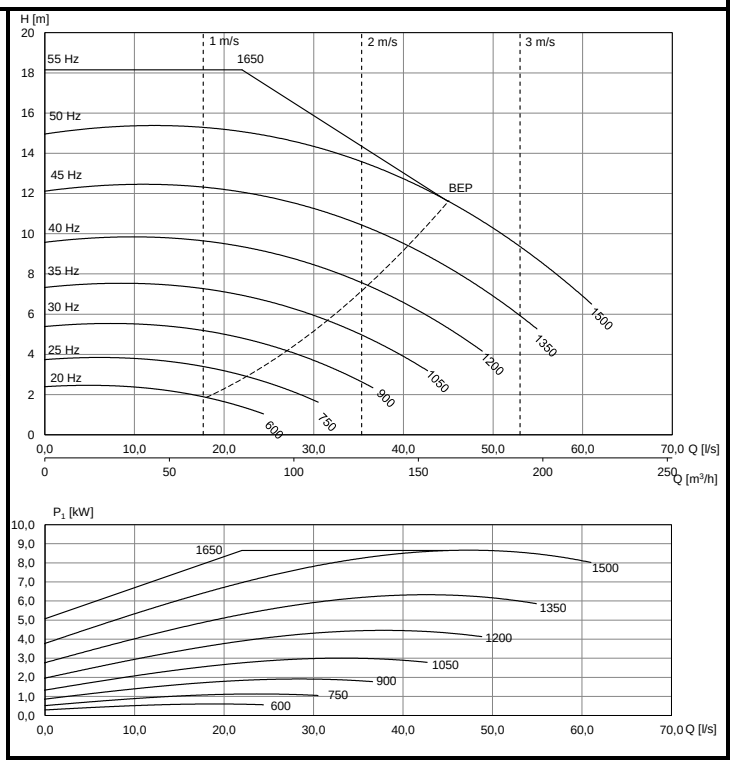

Motor	P_{2N} [kW]	I_N [A] (3x400V)	[kg]
KPVS-134 H2 F31	7,5	20,0	221

TECHNICAL INFORMATION

CIRCULATING PUMPS TO THE POWER PLANTS AND PRIMARY SIDE OF DISTRICT HEATING SYSTEMS, INLINE

INLINE PUMPS WITH INTEGRATED NC FREQUENCY CONVERTER,
1,1 – 3kW 1X230V
4 – 45kW 3X400V

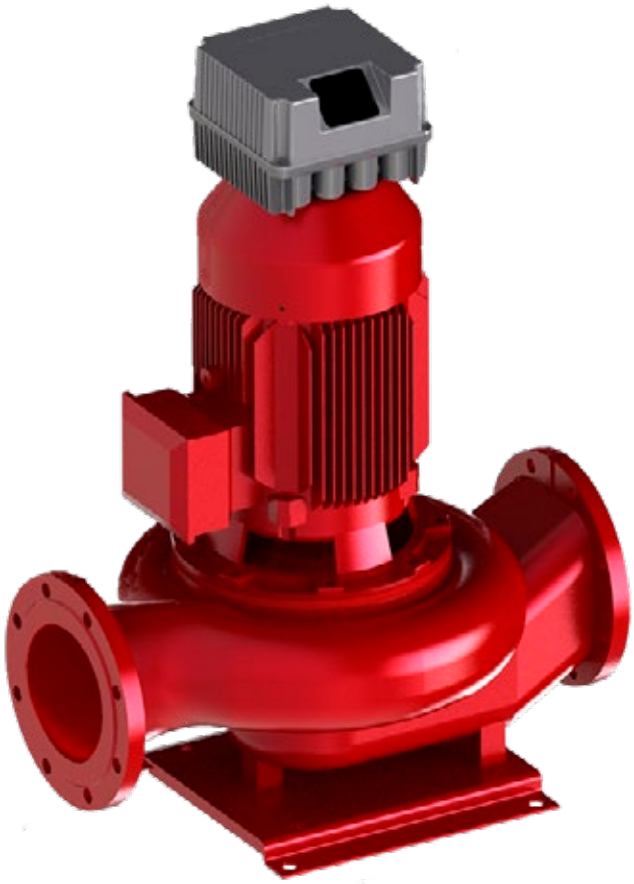

Kolmeks

www.kolmeks.com

General technical data

NC series of Kolmeks circulation pumps and variable speed controlled centrifugal pumps with integrated frequency converter.

Applications

NC series pumps can be used as circulation, pressure boosting and transfer pumps for clean liquids.

- Bronze NC pumps can be used as domestic hot water, circulation, pressure boosting and transfer pumps for clean, oxygen-rich and some slightly aggressive liquids.
- Stainless steel AISI316 NC pumps can be used as circulation, pressure boosting and transfer pumps for clean and aggressive liquids.

The most common applications of the NC pump series are heating, ventilation, cooling and heat recovery systems, heat exchangers, pressure boosting, district heating plants, ice rinks, swimming pools, spas and industrial processes.

Structure

Pump

NC series pumps are monoblock-structured centrifugal pumps with a dry asynchronous motor, which fulfill the
requirements of EcoDesign –directive. A frequency converter is integrated into the motor. The pump impeller is installed directly onto the shaft of the electric motor (no separate couplings).

Electric motor

The electric motor of an NC pump is a three-phase Kolmeks asynchronous motor designed specifically for pump use and frequency converter operation, which guarantees high starting torque and low energy consumption. The electric motor is highly efficient and has low noise levels. Moottori täyttää EcoDesign-direktiivin vaatimukset.

Supply voltage:	1,1 - 3kW 1 x 230 V, 50 Hz
	4 - 45kW 3 x 400 V, 50 Hz
Enclosure class:	IP 54
Insulation class:	F
Duty type:	Continuous Duty (S1)
Ambient temperature:	0°C ... +40°C

Connections

Flanged:

The flanges of NC pump fit counter-flanges dimensioned according to ISO 7005.

Threaded:

The NC pump threads are dimensioned according to Standard ISO 228/1.

Seals

The standard shaft seal of an NC series pump is a single mechanical seal. The pump housing seal is O-ring or flat gasket.
Other seal options are available by request.

Other Technical Data

See the section Technical Data of SC- and VS –pumps.

Seal structure alternatives

Standard structure

- Single mechanical seal
- Max. operating temperature +120°C.

The standard-construction shaft seal can also be used for water-glycol mixtures and most other indirect refrigeration systems. The recommended glycol is propylene glycol with a concentration of up to 50%. Most often, a concentration of 30–40% is adequate.

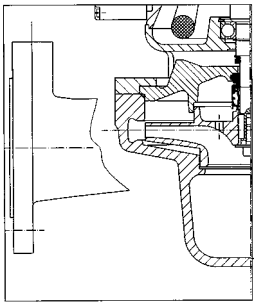

Internal flushing

- Single mechanical seal
- Recirculation from the discharge flange of the pump to the seal chamber which flushes the seal
- Max. +150°C water
- Available for flange sizes DN50 ... DN300. . This is indicated with an additional marking 'H' in the pump type e.g. LS-65B/4H.

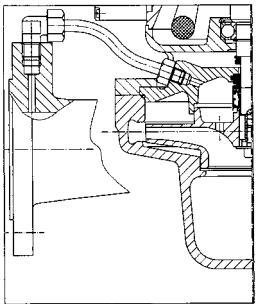

External flushing

- Single mechanical seal
- A pipe from an external source plugged to the seal chamber, which makes it possible to flush the seal with external pressure if required
- Available for pumps in flange sizes DN 50–300 pumps
- Crystallising and accumulative liquids

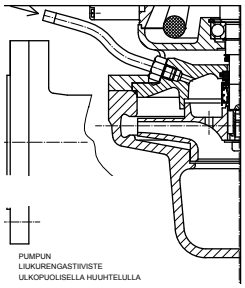

External seal

- Externally-mounted single mechanical Teflon bellows
- Available for flange sizes DN 65–300 ALS pumps
- Extremely corrosive liquids, e.g. sulfuric acid
- Marking 'T' in the pump type e.g. ALS-1065/4T
- NOTE! Maximum working pressure 10 bar

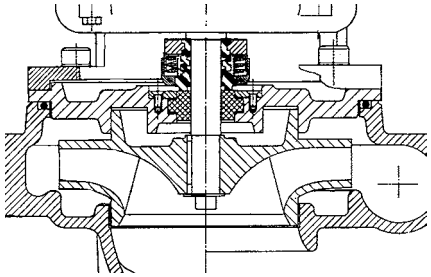

Double mechanical seal system (cartridge)

- Two opposing seals with sealing liquid brought from outside (circulation). The pressure of the liquid can be lower or higher than that of the liquid being pumped
- Available for flange sizes DN 65–300 pumps
- Max. operating temperature +180°C for water
- Requires a separate seal water monitoring unit (available from Kolmeks)
- Marking 'KT' in the pump type e.g. ALS-1154/4KT
- Hot, crystallizing and accumulative liquids

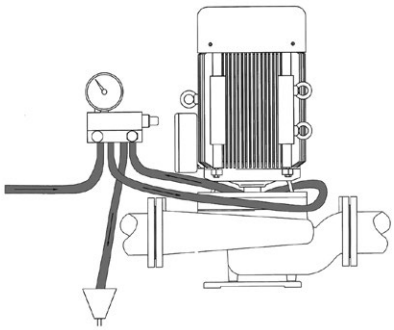

NC_ -pump standard materials and fields of application

Connection G or DN	Grey cast iron EN-GJL-200, PN10	Nodular cast iron EN-GJS-400, PN16	Bronze CuSn10Zn2, PN10	Stainless steel AISI 316, PN 16	Shaft seal PN10 Ø [mm] materials	O-ring size [mm]	O-ring material	Motor [kW]
G1	AE-26/2 NC	-	AEP-26/2 NC	-	12, carbon/SiC Viton	123 X 2,5	NBR	1,1
G1 1/4	AE-33/2 NC	-	AEP-33/2 NC	-	12, carbon/SiC Viton	145 X 2,5	NBR	1,1 and 1,5
DN 32	L-32A/2 NC	-	-	-	12, carbon/SiC EPDM	100 X 2,5	NBR	1,1
DN 40	L-40A/2 NC	-	-	-	12, carbon/SiC EPDM	145 X 2,5	NBR	1,1 and 1,5
DN 50	L-50B/2 NC	-	LP-50B/2 NC	-	12, carbon/SiC EPDM	150 X 3	NBR	1,1
	L-50C/2 NC	LH-50C/2 NC	LP-50C/2 NC	-	18, carbon/SiC EPDM	150 X 3	NBR	1,5, 2,2, 3 and 4
	L-50D/2 NC	LH-50D/2 NC	LP-50D/2 NC	-	18, carbon/SiC EPDM	150 X 3	NBR	1,5, 2,2, 3 and 4
DN 65	L-65A/4 NC	LH-65A/4 NC	-	-	18, carbon/SiC EPDM	179,3 X 5,7	EPDM	1,1 1,5, 2,2 and 3
	L-65B/2 NC	LH-65B/2 NC	-	LS-65B/2 NC	18, carbon/SiC EPDM	179,3 X 5,7	EPDM	1,5, 2,2, 3, 4, 5,5 and 7,5
DN 80	L-80A/4 NC	LH-80A/4 NC	-	-	18, carbon/SiC EPDM	179,3 X 5,7	EPDM	1,1, 1,5, 2,2 and 3
	L-80A/2 NC	LH-80A/2 NC	-	-	18, carbon/SiC EPDM	179,3 X 5,7	EPDM	4, 5,5 and 7,5
	L-80S/4 NC	LH-80S/4 NC	-	-	28, carbon/SiC EPDM	265 X 4	EPDM	2,2, 3, 4, 5,5 and 7,5
DN 100	AL-1102/4 NC	ALH-1102/4 NC	ALP-1102/4 NC	ALS-1102/4 NC	18, carbon/SiC EPDM	179,3 X 5,7	EPDM	1,1, 1,5, 2,2 and 3
	AL-1102/2 NC	ALH-1102/2 NC	ALP-1102/2 NC	ALS-1102/2 NC	18, carbon/SiC EPDM	179,3 X 5,7	EPDM	4, 5,5 and 7,5
	L-100S/4 NC	LH-100S/4 NC	-	-	32, carbon/SiC EPDM	315 X 6,3	EPDM	4, 5,5, 7,5, 11 and 15
	AKN-100/2 NC	AKNH-100/2 NC	-	-	25, carbon/SiC EPDM	240 X 3	NBR	11 and 15
DN 125	AL-1129/4 NC	ALH-1129/4 NC	-	ALS-1129/4 NC	32, carbon/SiC EPDM	309/295X1	gasket	3, 4, 5,5, 7,5, 11 and 15
DN 150	AL-1154/4 NC	ALH-1154/4 NC	-	ALS-1154/4 NC	32, carbon/SiC EPDM	309/295X1	gasket	5,5 ,7,5, 11 and 15
DN 200	AL-1202/6 SD NC	ALH-1202/6 SD NC	ALP-1202/6 SD NC	ALS-1202/6 SD NC	32, carbon/SiC EPDM	309/295X1	EPDM	5,5, 7,5 and 11
	AL-1202/4 NC	ALH-1202/4 NC	ALP-1202/4 NC	ALS-1202/4 NC	32, carbon/SiC EPDM	315 X 6,3	EPDM	15
DN 250	AL-1250/6 SD NC	ALH-1250/6 SD NC	-	ALS-1250/6 SD NC	40, carbon/SiC EPDM	405 X 7	EPDM	15, 18,5 and 22
	AL-1250/6 SD NC	ALH-1250/6 SD NC	-	ALS-1250/6 SD NC	50, carbon/SiC EPDM	405 X 7	EPDM	30
	AL-1250/4 NC	ALH-1250/4 NC	-	ALS-1250/4 NC	40, carbon/SiC EPDM	405 X 7	EPDM	37
	AL-1250/4 NC	ALH-1250/4 NC	-	ALS-1250/4 NC	50, carbon/SiC EPDM	405 X 7	EPDM	45

AL_-1202/6 and AL_-1250/6 are SD-pumps.
Operating temperature -15...+180 °C (Max. temperature is depending on medium and the type and construction of the mechanical seal)
PN10 = Max. working pressure 10bar, grey cast iron and bronze
PN16 = Max. working pressure 16bar, nodular cast iron and stainless steel

Quick selection chart NC-pump

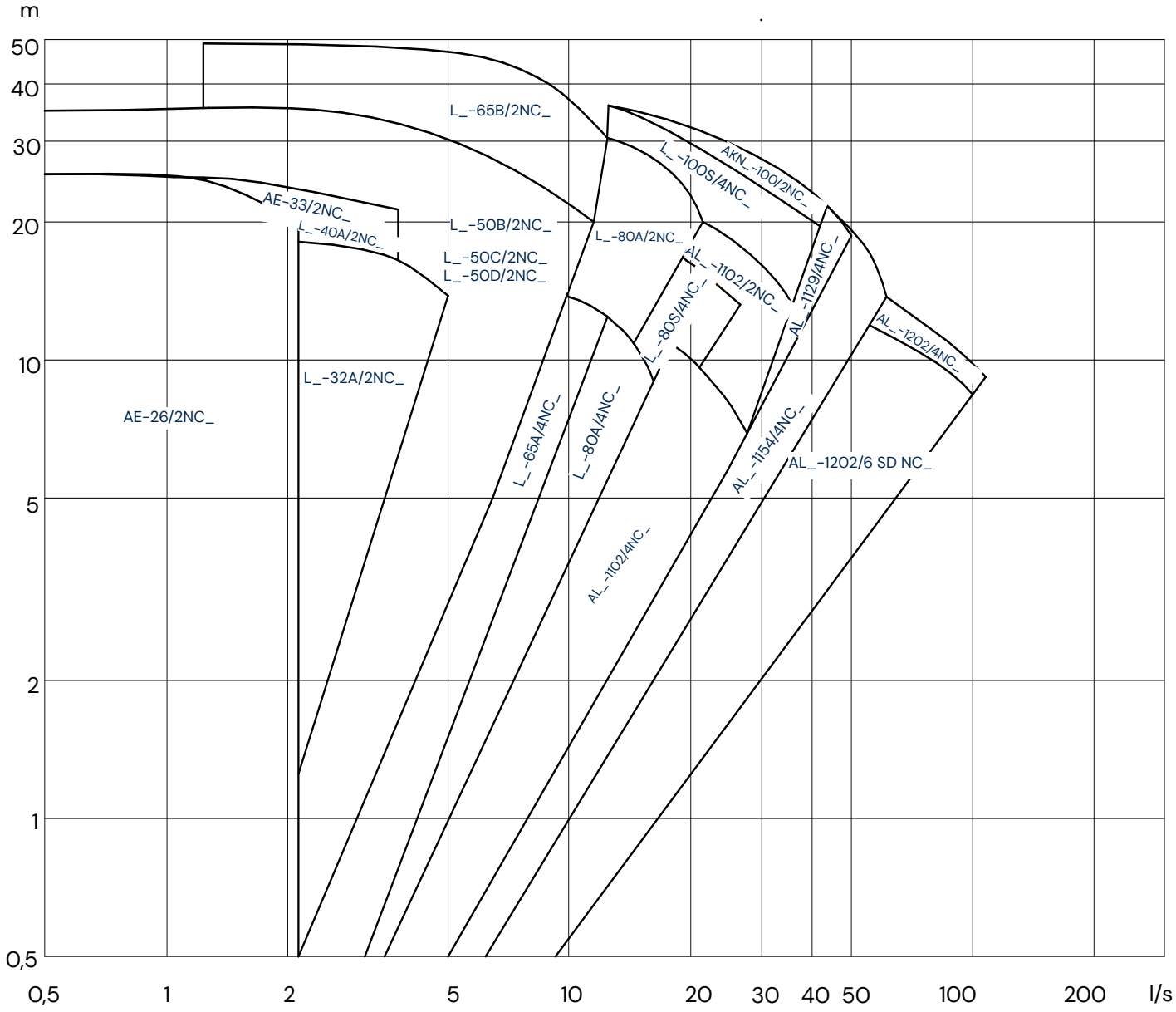

DATA SHEETS

INLINE PUMPS WITH INTEGRATED NC FREQUENCY CONVERTER

1,1-3kW 1X230V
4-45kW 3X400V

AE-series, threaded G1-G1¼

L- and AL-series, flanged DN32-DN200

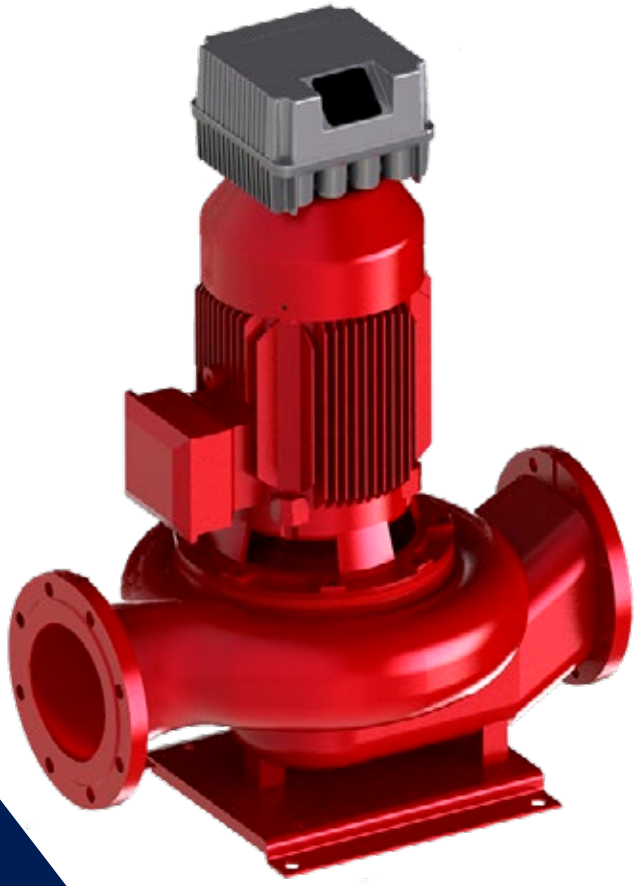

AE-26/2 NC | AEP-26/2 NC

1"	1200 - 3600 r/min	Ø125	1~230 V

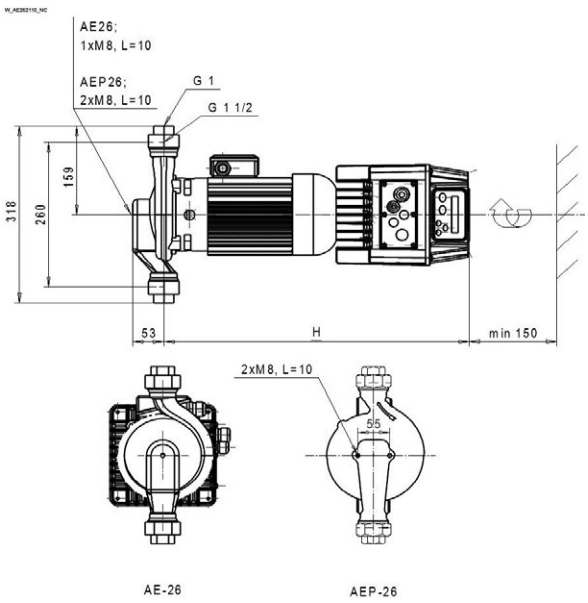

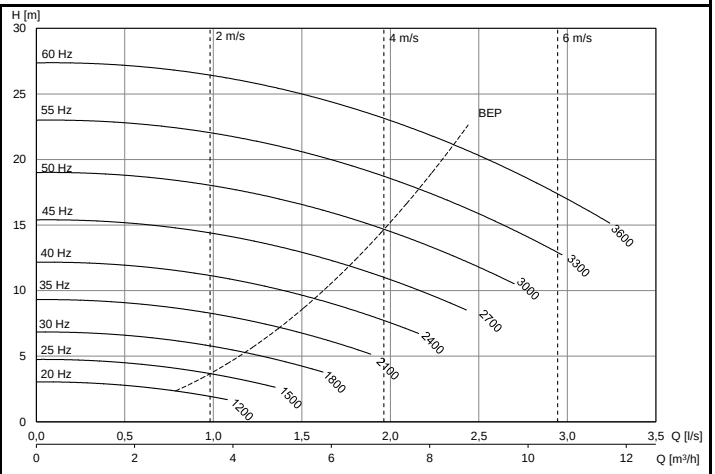

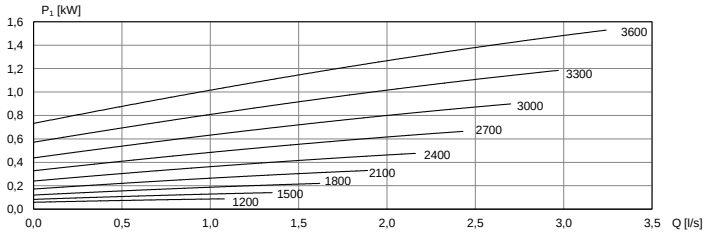

Motor	P_{2N} [kW]	$I_{In,Max}$ [A] (1x230V)	[kg]	H [mm]
KH-871 N12	1,1	15,0	23	525

AE-33/2 NC | AEP-33/2 NC

1"1/4	1200 - 3000 r/min	Ø120	1~230 V

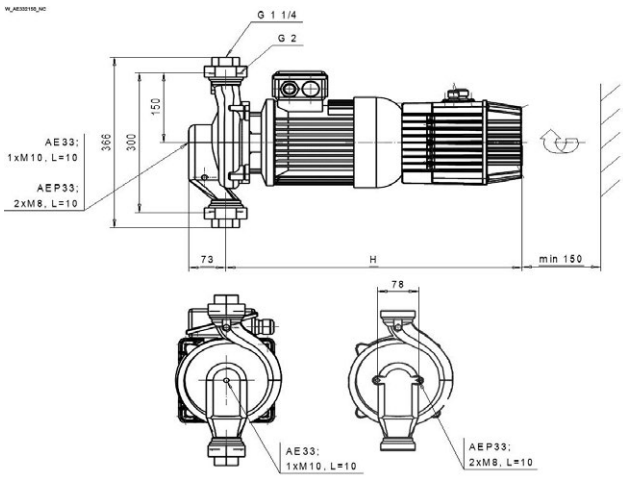

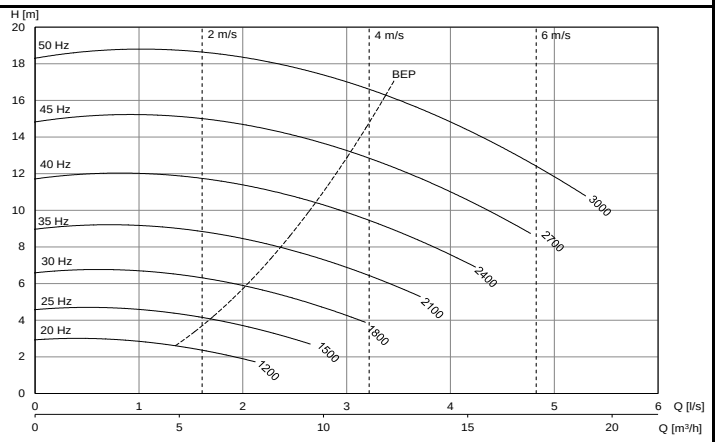

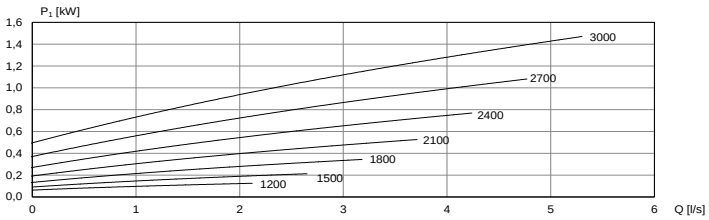

Motor	P_{2N} [kW]	$I_{In,Max}$ [A] (1x230V)	[kg]	H [mm]
KH-871 N13	1,1	15,0	31	525

AE-33/2 NC | AEP-33/2 NC

1"1/4	1200 - 3000 r/min	Ø140	1~230 V

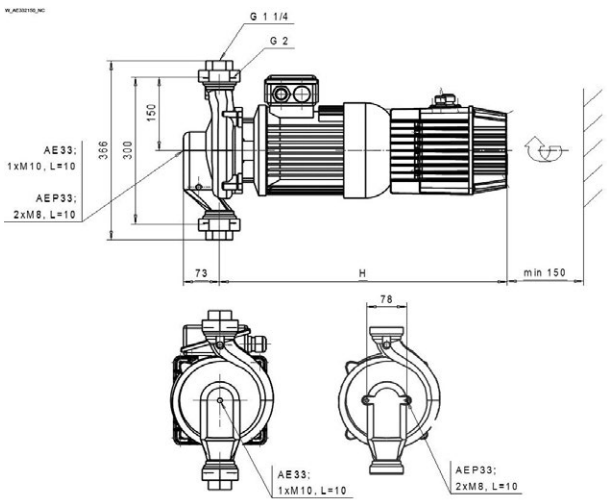

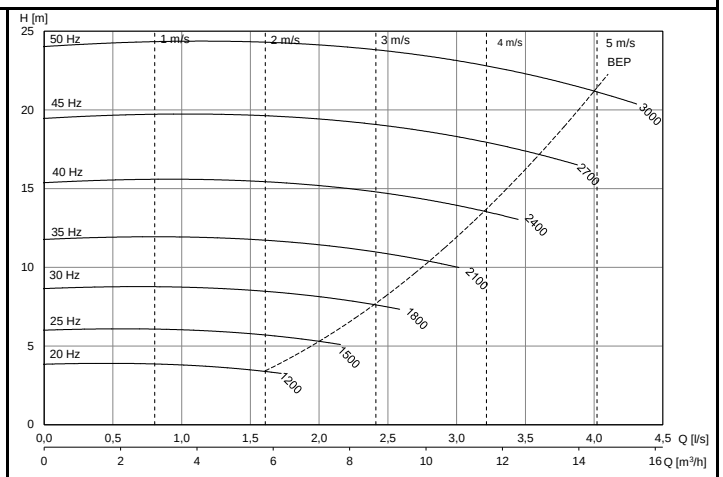

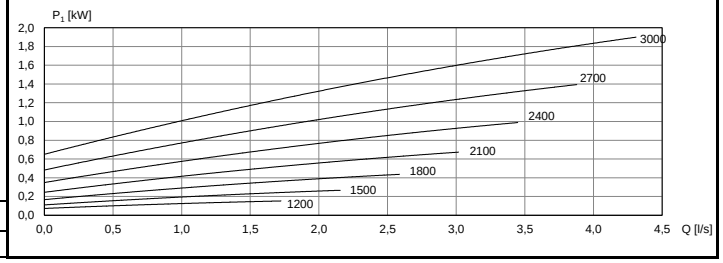

Motor	P_{2N} [kW]	$I_{In,Max}$ [A] (1x230V)	[kg]	H [mm]
KH-101 C1 N13	1,5	15,0	39	565

L-32A/2 NC

DN32	1200 - 3600 r/min	Ø105	1~230 V

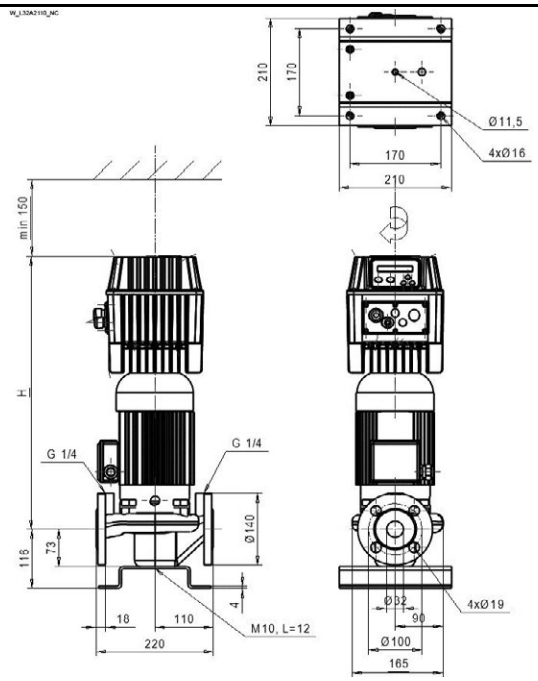

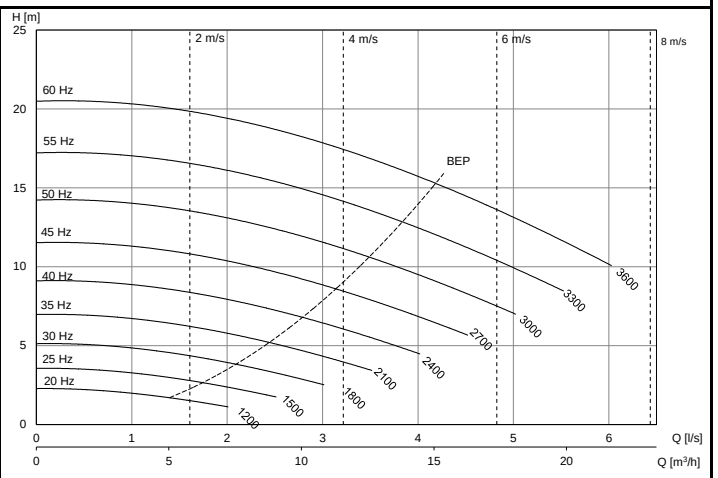

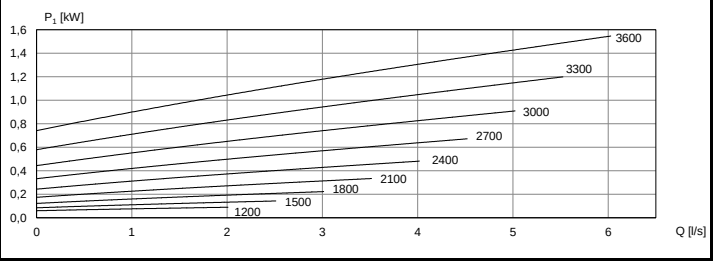

Motor	P_{2N} [kW]	$I_{In,Max}$ [A] (1x230V)	[kg]	H [mm]
KH-871 N12	1,1	15,0	30	525

L-40A/2 NC

DN40	1200 - 3000 r/min	Ø120	1~230 V

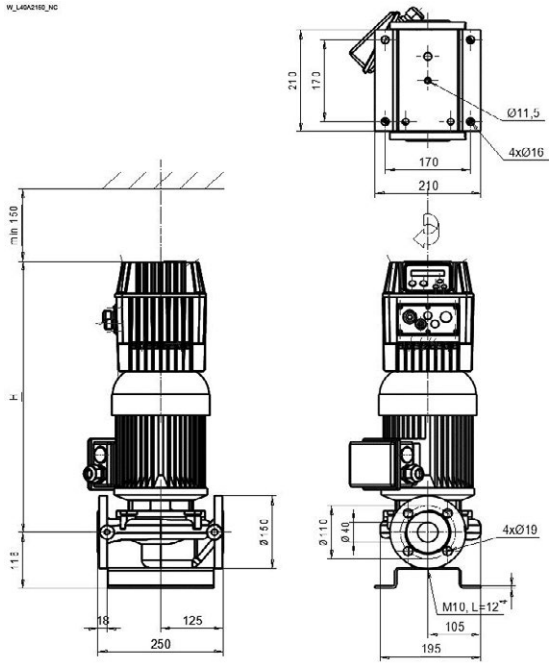

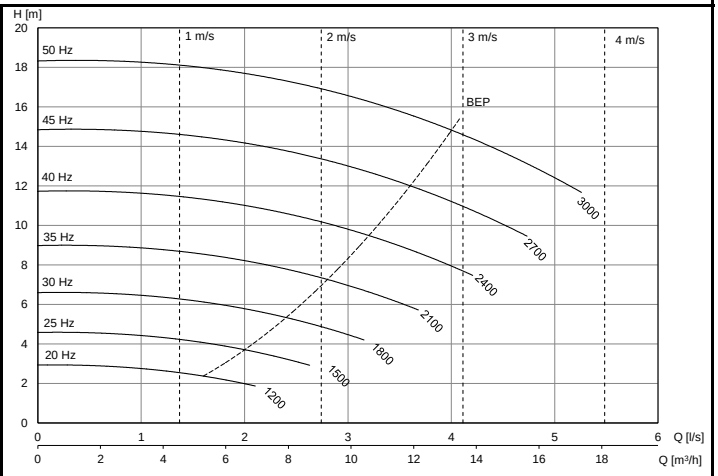

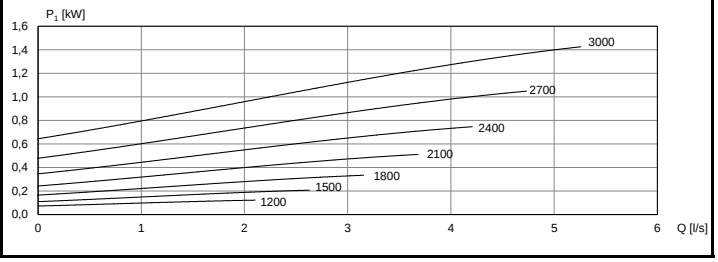

Motor	P_{2N} [kW]	$I_{In,Max}$ [A] (1x230V)	[kg]	H [mm]
KH-871 N13	1,1	15,0	31	252

L-40A/2 NC

DN40	1200 - 3000 r/min	Ø140	1~230 V

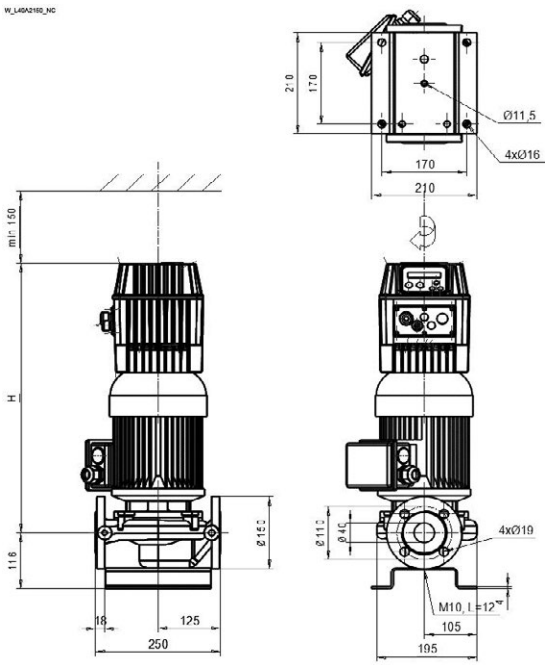

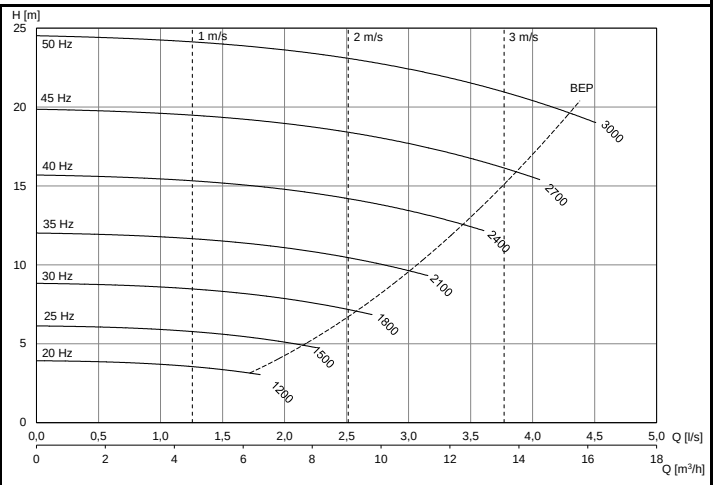

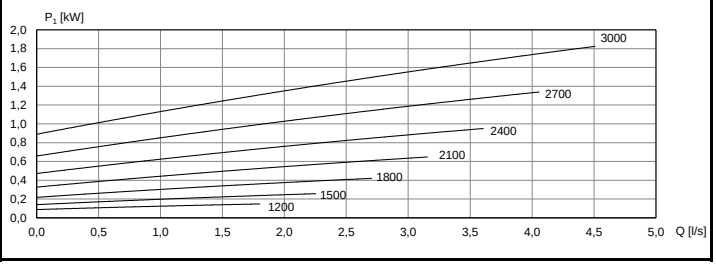

Motor	P_{2N} [kW]	$I_{In,Max}$ [A] (1x230V)	[kg]	H [mm]
KH-101 C1 N13	1,5	15,0	44	565

L-50B/2 NC | **LP-50B/2 NC**

DN50	1200 - 3000 r/min	Ø120	1~230 V

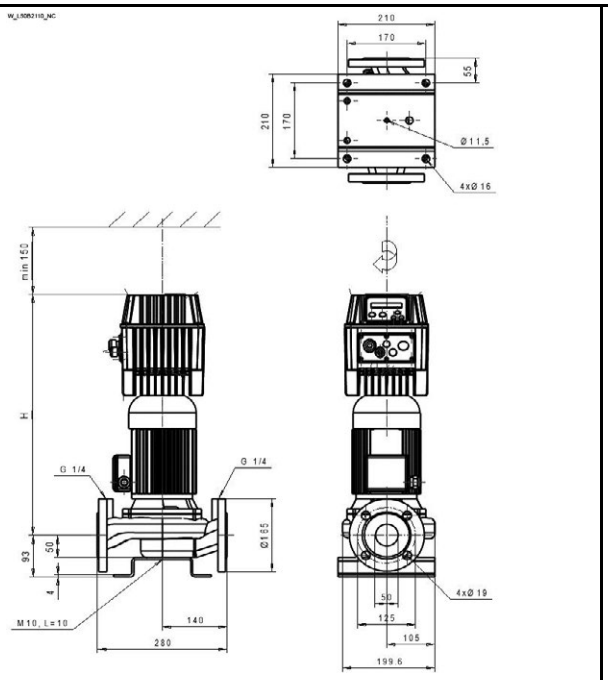

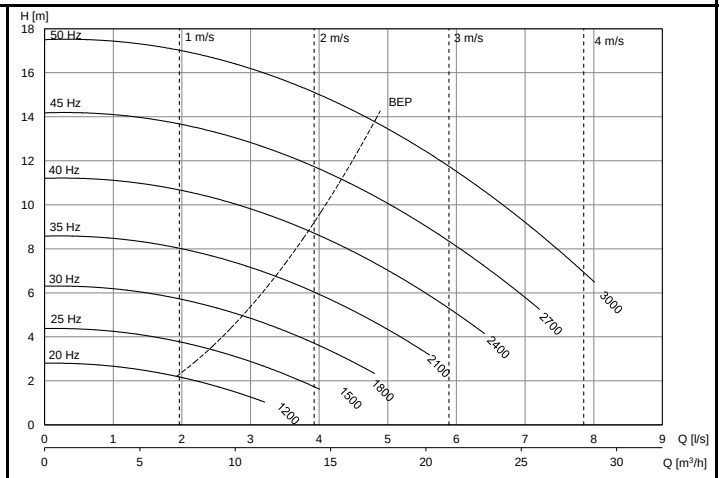

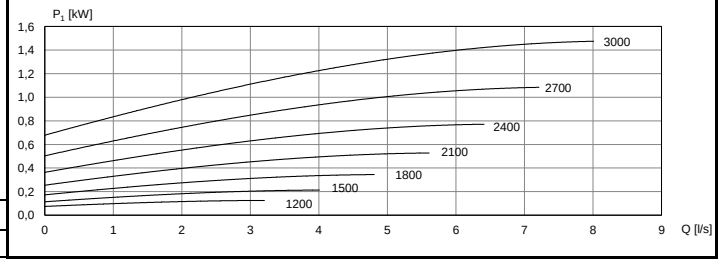

Motor	P_{2N} [kW]	$I_{In,Max}$ [A] (1x230V)	[kg]	H [mm]
KH-871 F15	1,1	15,0	38	545

L-50C/2 NC | **LH-50C/2 NC** | **LP-50C/2 NC**

DN50	1200 - 3000 r/min	Ø130	1~230 V

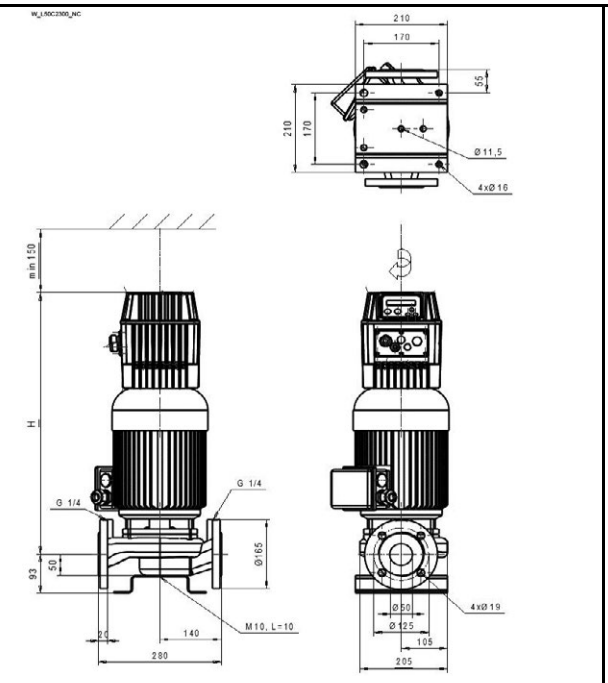

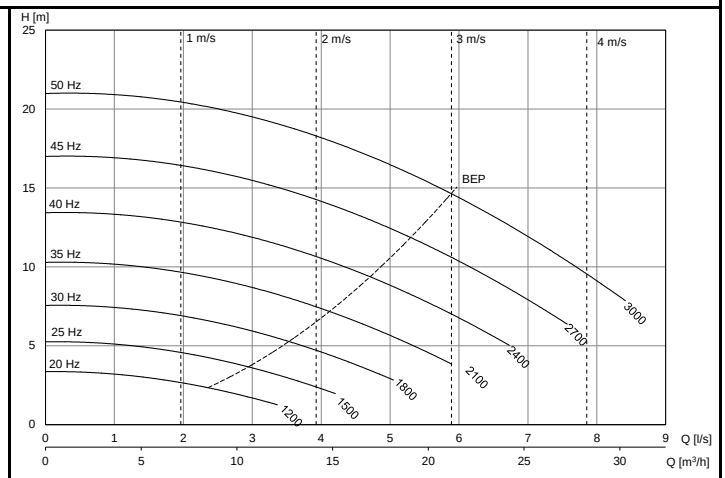

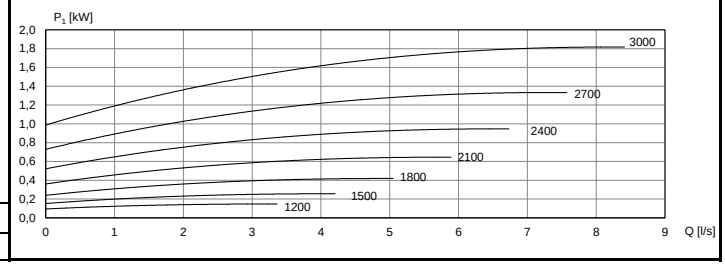

Motor	P_{2N} [kW]	$I_{In,Max}$ [A] (1x230V)	[kg]	H [mm]
KH-101 C1 F16	1,5	15,0	46	585

L-50C/2 NC	LH-50C/2 NC	LP-50C/2 NC		

DN50	1200 - 3000 r/min	Ø150	1~230 V

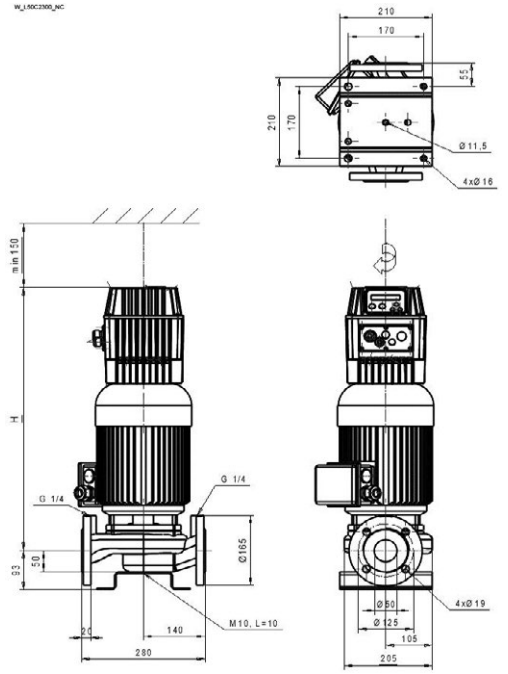

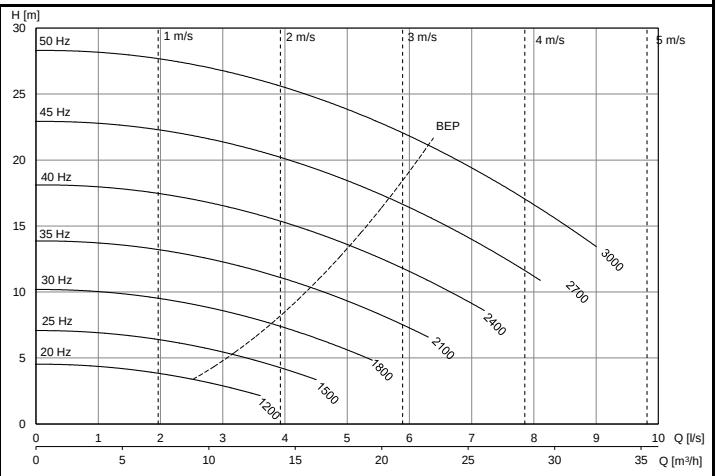

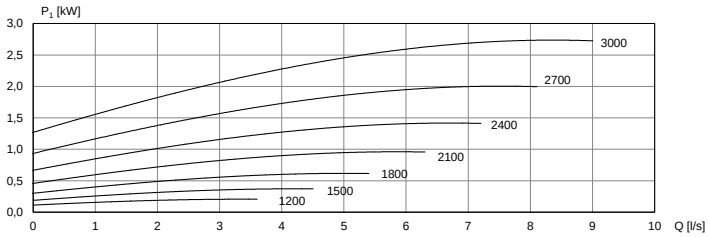

Motor	P_{2N} [kW]	$I_{In,Max}$ [A] (1x230V)	[kg]	H [mm]
KH-101 D1 F16	2,2	20,0	49	585

L-50C/2 NC	LH-50C/2 NC	LP-50C/2 NC		

DN50	1200 - 3300 r/min	Ø150	1~230 V

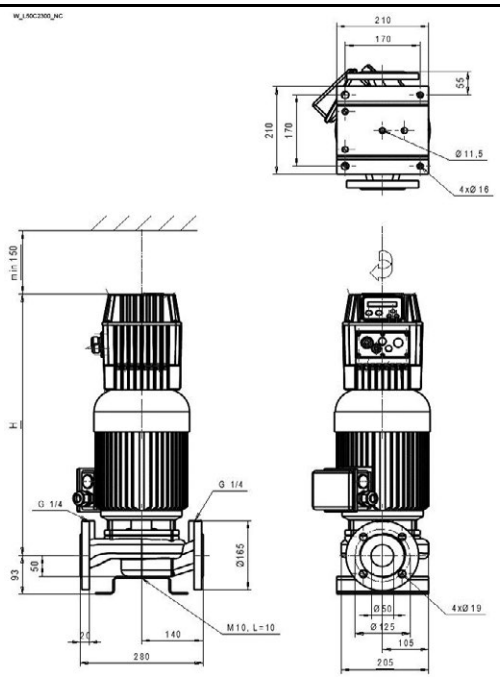

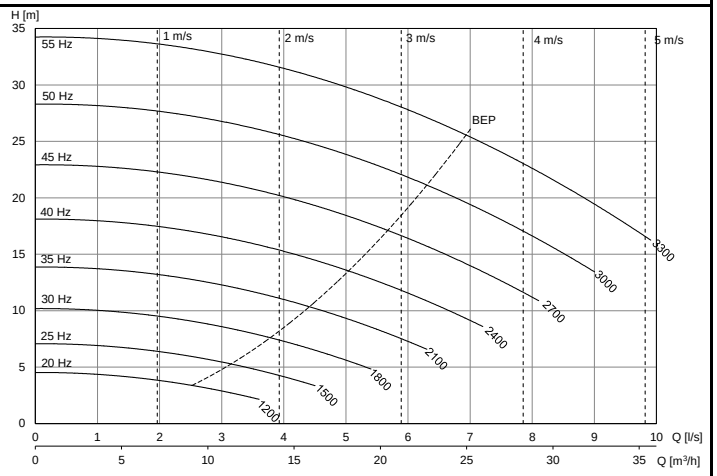

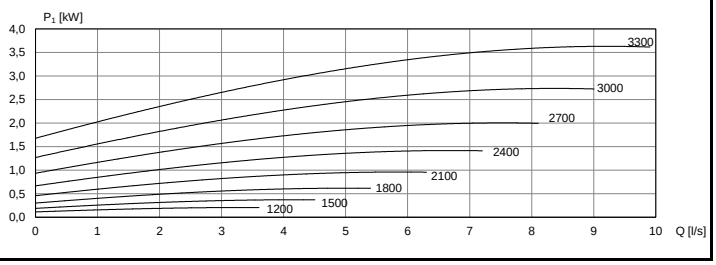

Motor	P_{2N} [kW]	$I_{In,Max}$ [A] (1x230V)	[kg]	H [mm]
KH-112 C1 F16	3	20,0	55	630

L-50C/2 NC | **LH-50C/2 NC** | **LP-50C/2 NC**

DN50	1200 - 3600 r/min	Ø150	3~400 V

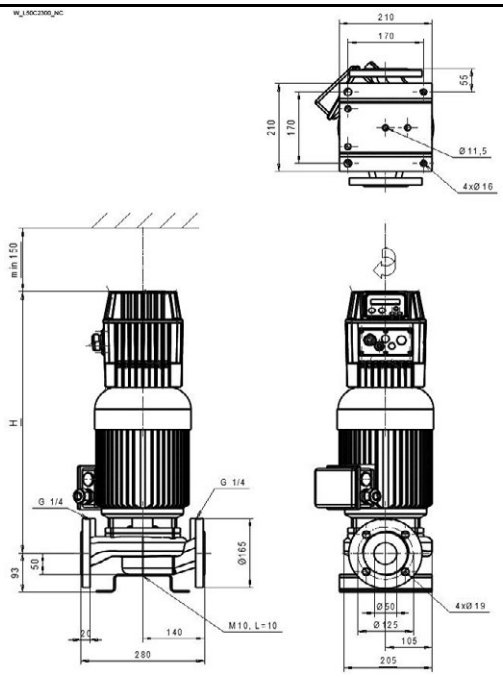

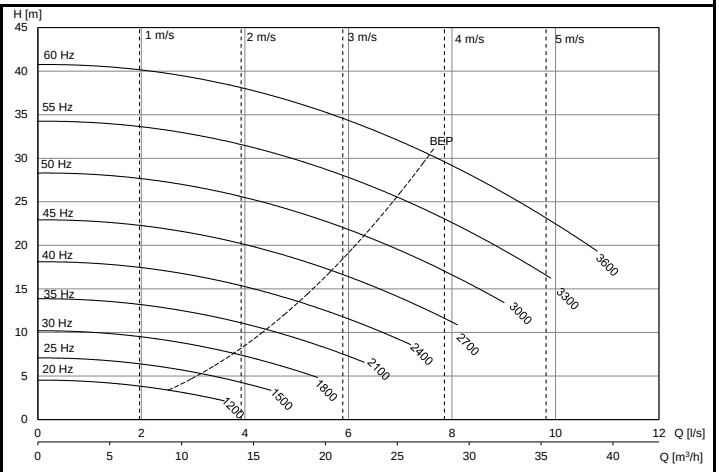

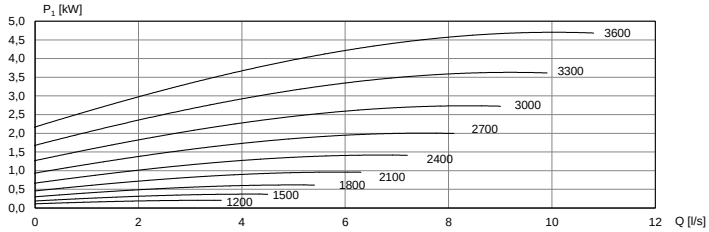

Motor	P_{2N} [kW]	$I_{In,Max}$ [A] (3x400V)	[kg]	H [mm]
KH-112 E1 F16	4	13,5	60	630

L-50D/2 NC | **LH-50D/2 NC** | **LP-50D/2 NC**

DN50	1200 - 3000 r/min	Ø110	1~230 V

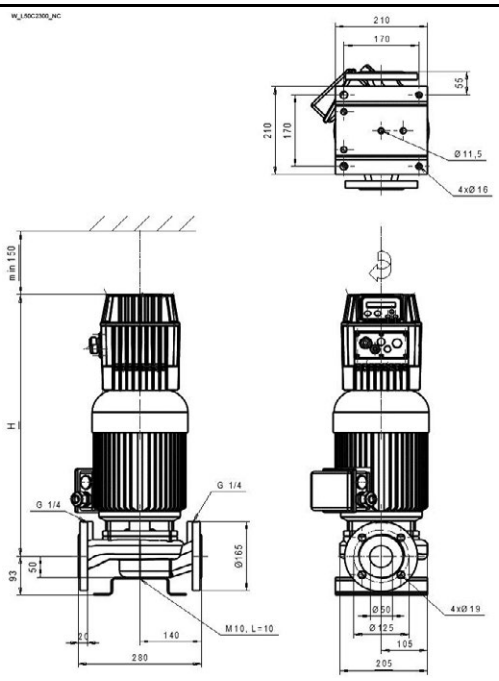

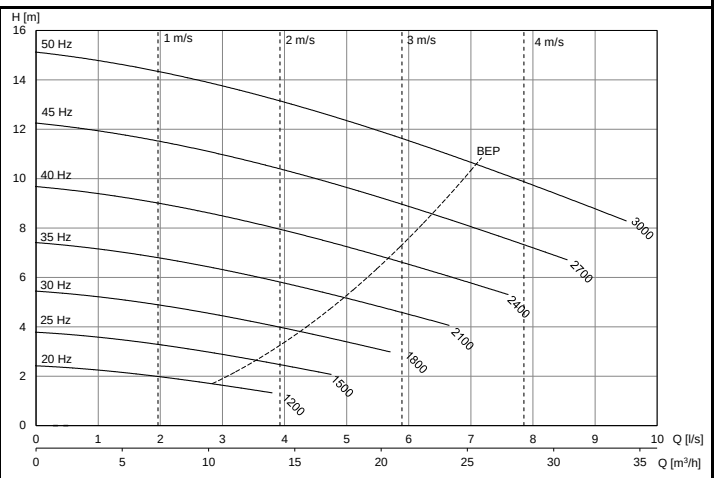

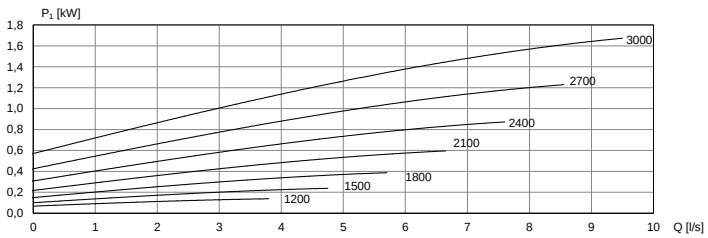

Motor	P_{2N} [kW]	$I_{In,Max}$ [A] (1x230V)	[kg]	H [mm]
KH-101 C1 F16	1,5	15,0	46	585

L-50D/2 NC	LH-50D/2 NC	LP-50D/2 NC		

DN50	1200 - 3000 r/min	Ø130	1~230 V

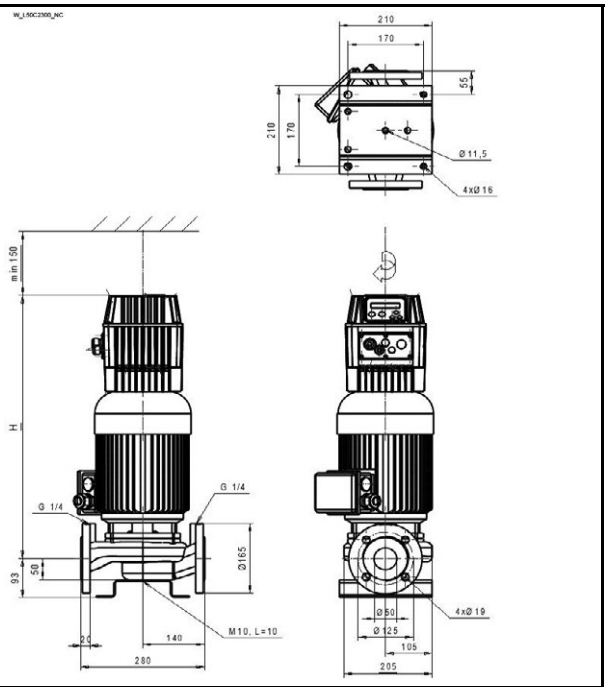

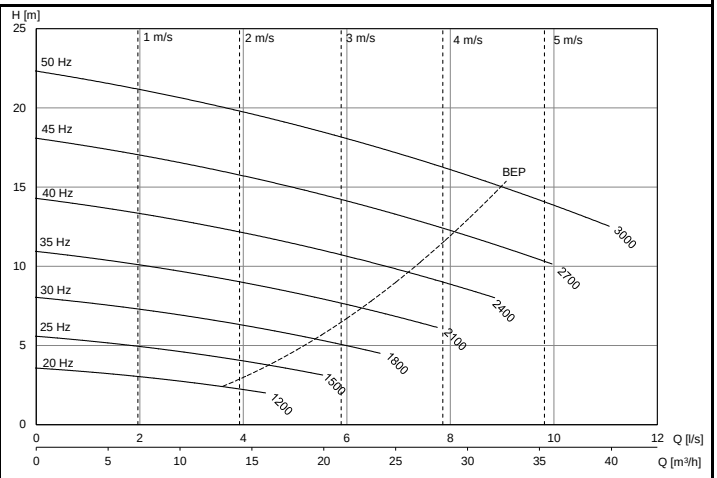

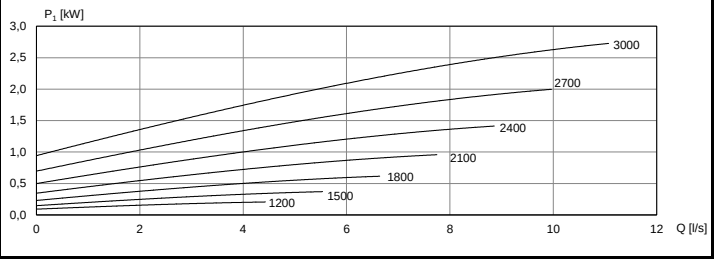

Motor	P_{2N} [kW]	$I_{In,Max}$ [A] (1x230V)	[kg]	H [mm]
KH-101 D1 F16	2,2	20,0	49	585

L-50D/2 NC	LH-50D/2 NC	LP-50D/2 NC		

DN50	1200 - 3300 r/min	Ø130	1~230 V

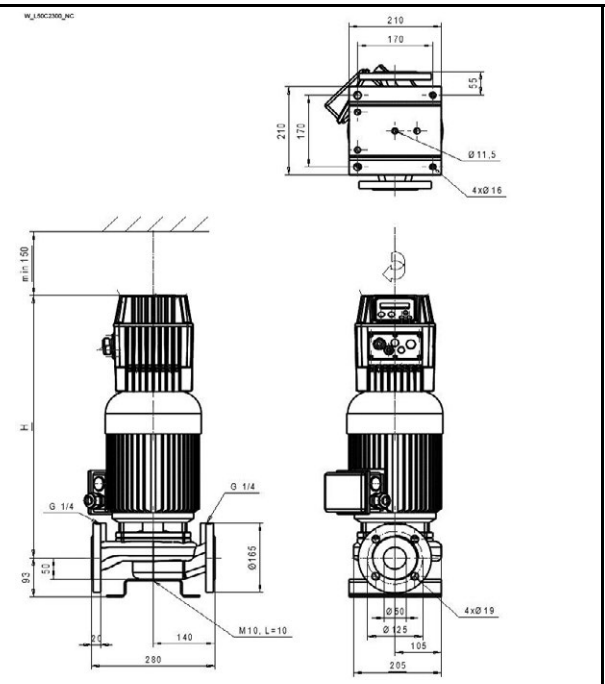

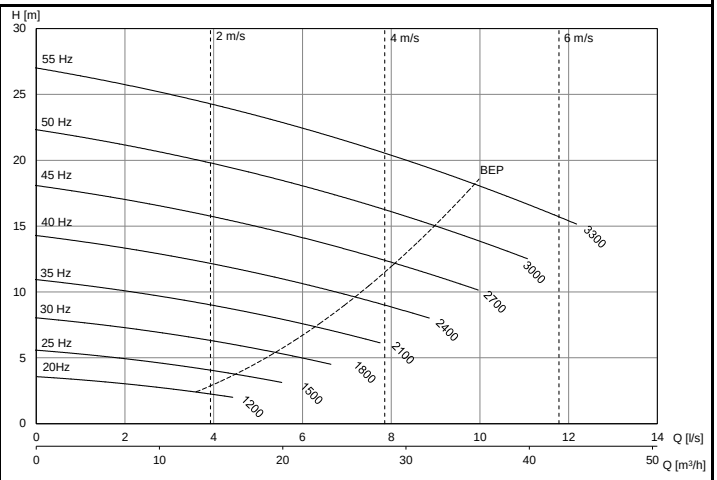

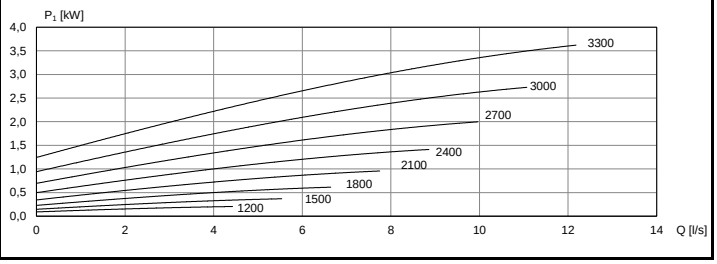

Motor	P_{2N} [kW]	$I_{In,Max}$ [A] (1x230V)	[kg]	H [mm]
KH-112 C1 F16	3	20,0	55	630

L-50D/2 NC | **LH-50D/2 NC** | **LP-50D/2 NC**

DN50	1200 - 3600 r/min	Ø130	3~400 V

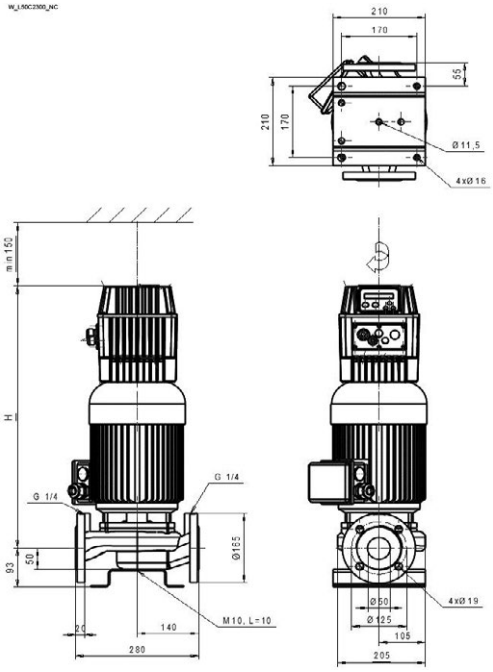

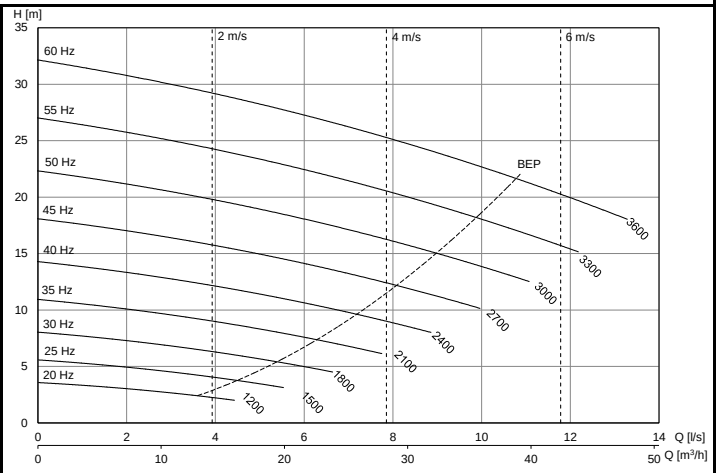

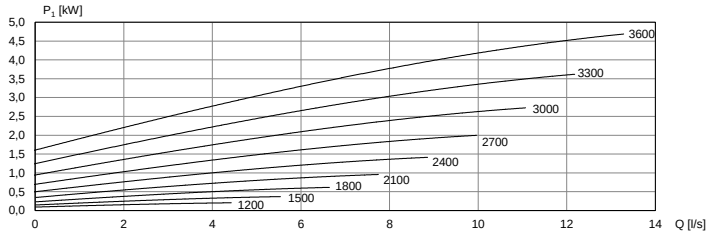

Motor	P_{2N} [kW]	$I_{In,Max}$ [A] (3x400V)	[kg]	H [mm]
KH-112 E1 F16	4	13,5	60	630

L-65A/4 NC | **LH-65A/4 NC**

DN65	600 - 1500 r/min	Ø180	1~230 V

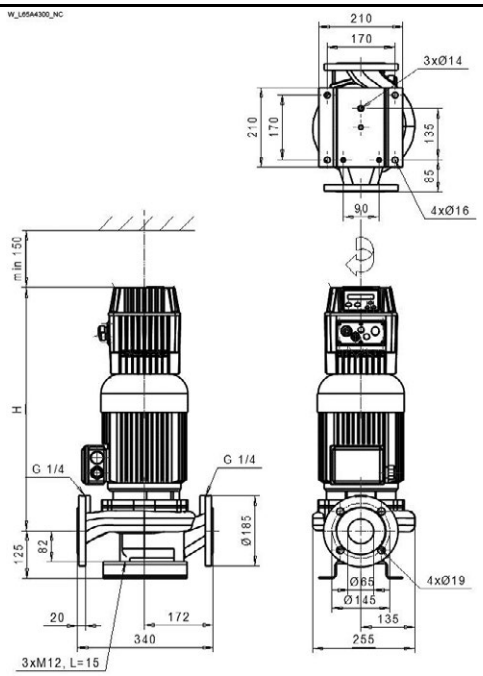

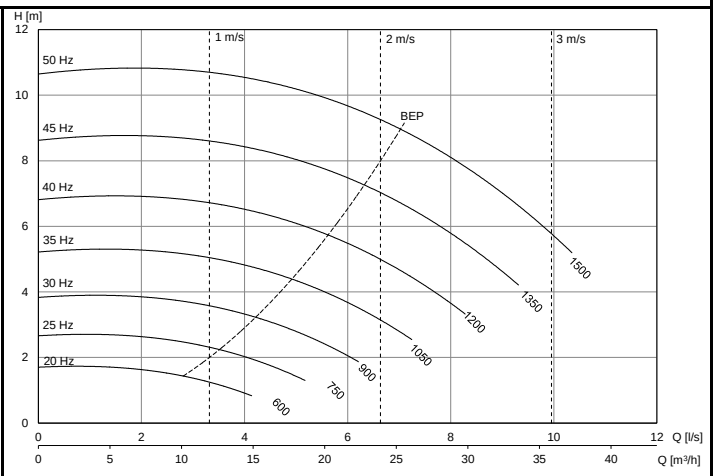

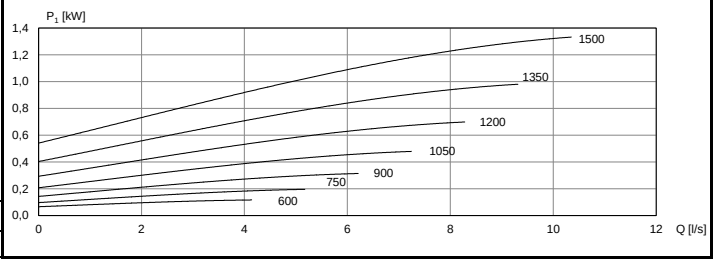

Motor	P_{2N} [kW]	$I_{In,Max}$ [A] (1x230V)	[kg]	H [mm]
KH-101 C2 F19	1,1	15,0	54	600

L-65A/4 NC | **LH-65A/4 NC**

DN65	600 - 1500 r/min	Ø188	1~230 V

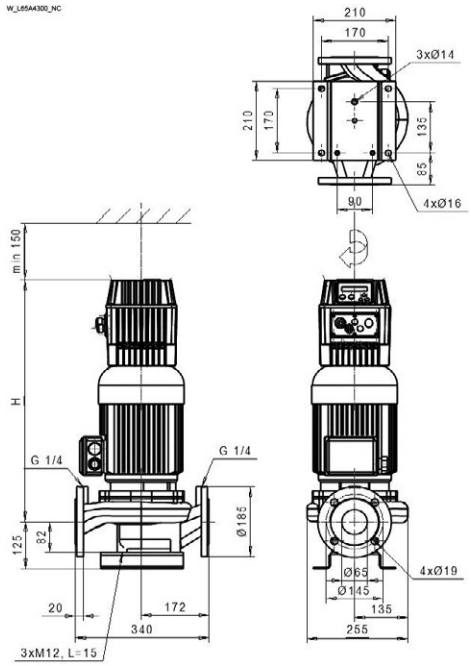

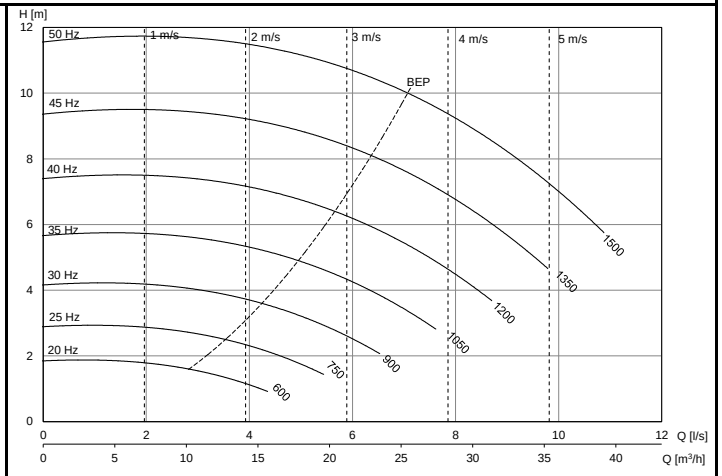

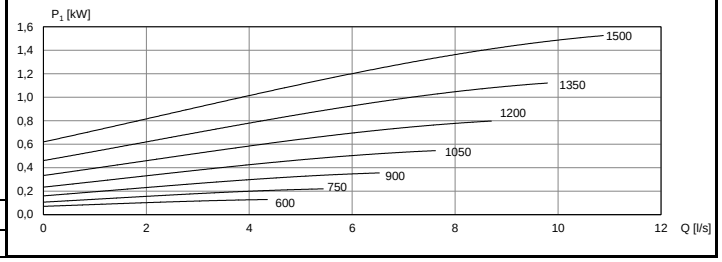

Motor	P_{2N} [kW]	$I_{In,Max}$ [A] (1x230V)	[kg]	H [mm]
KH-101 D2 F19	1,5	15,0	58	600

L-65A/4 NC | **LH-65A/4 NC**

DN65	600 - 1800 r/min	Ø188	1~230 V

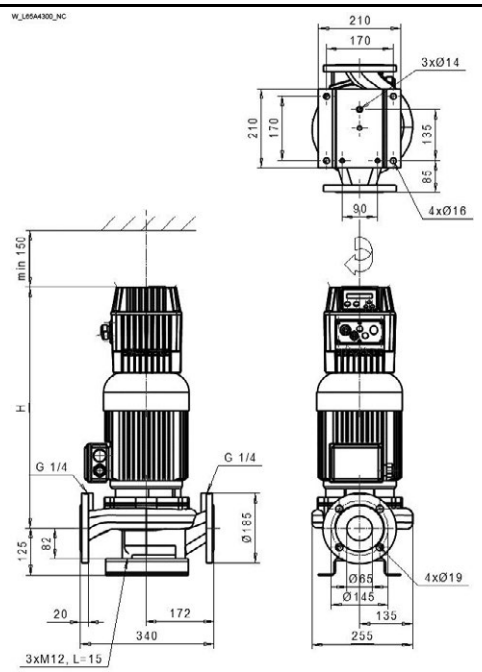

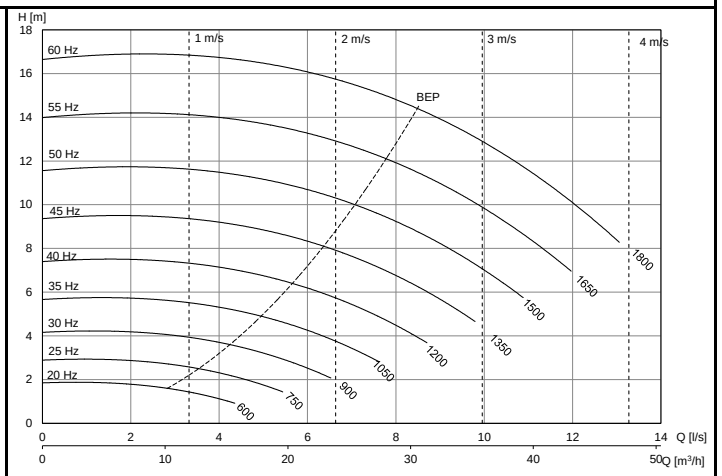

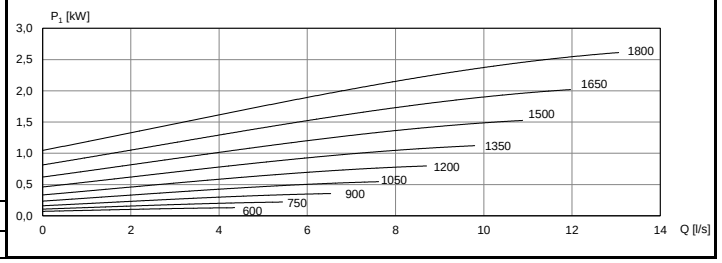

Motor	P_{2N} [kW]	$I_{In,Max}$ [A] (1x230V)	[kg]	H [mm]
KH-112 C2 F19	2,2	20,0	64	645

L-65A/4 NC | **LH-65A/4 NC**

DN65	600 - 1950 r/min	Ø188	1~230 V

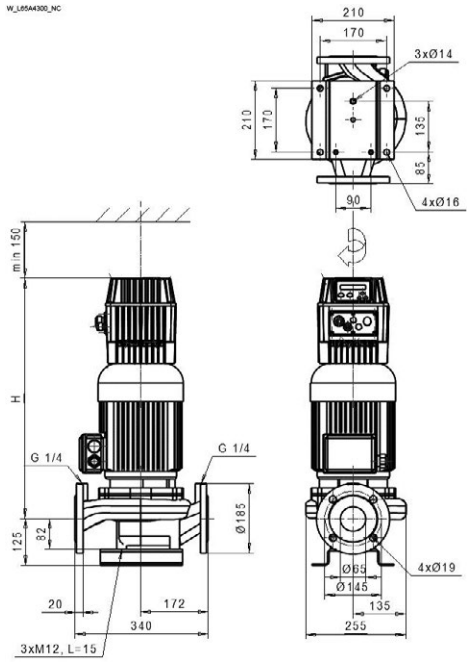

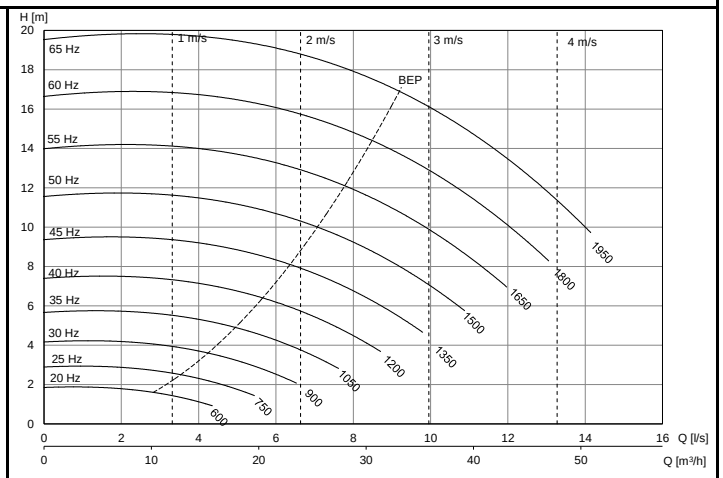

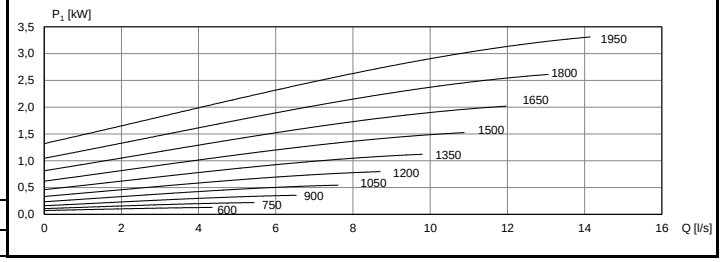

Motor	P_{2N} [kW]	$I_{In,Max}$ [A] (1x230V)	[kg]	H [mm]
KH-112 E2 F19	3	20,0	68	645

L-65B/2 NC | **LH-65B/2 NC** | **LS-65B/2 NC**

DN65	1200 - 3000 r/min	Ø125	1~230 V

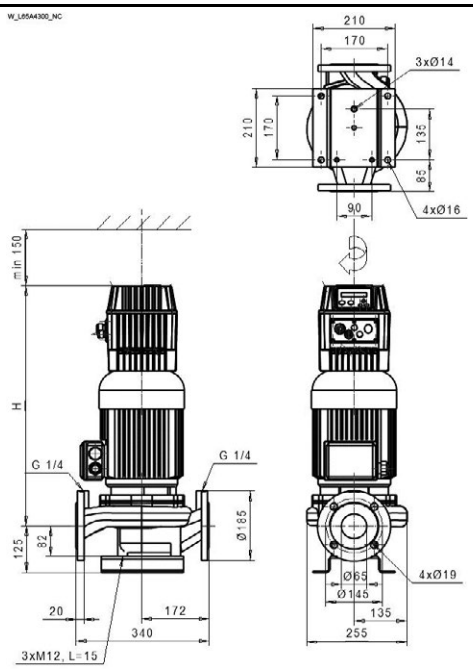

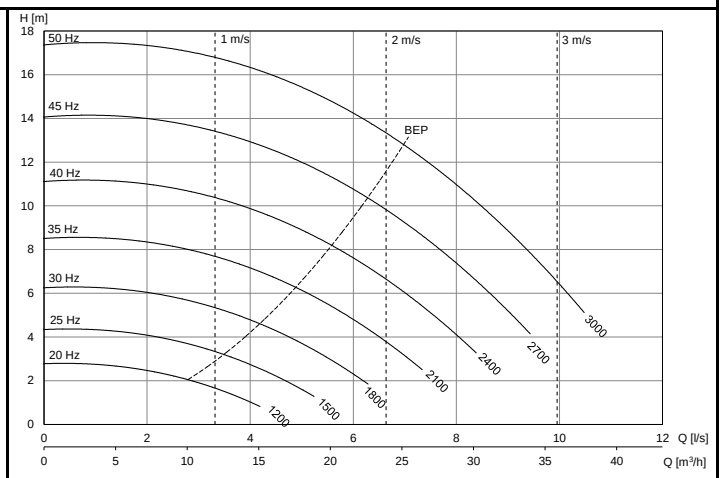

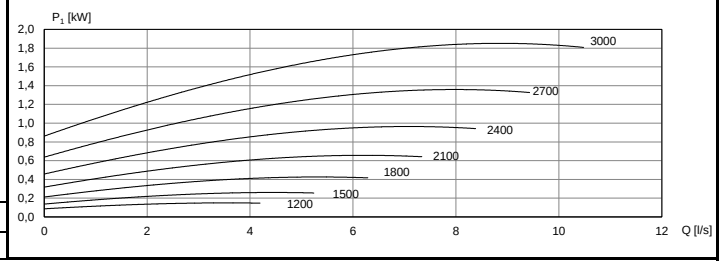

Motor	P_{2N} [kW]	$I_{In,Max}$ [A] (1x230V)	[kg]	H [mm]
KH-101 C1 F19	1,5	15,0	57	600

L-65B/2 NC	LH-65B/2 NC	LS-65B/2 NC		

DN65	1200 - 3000 r/min	Ø138	1~230 V

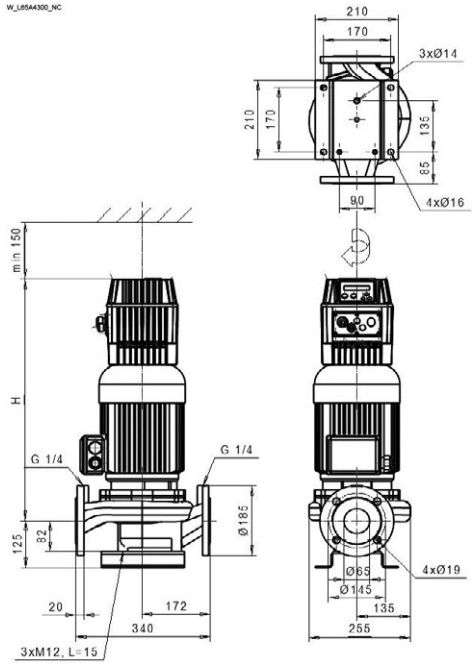

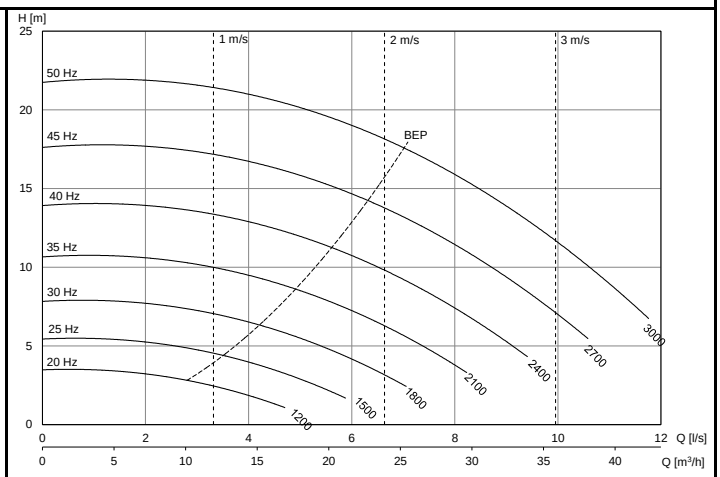

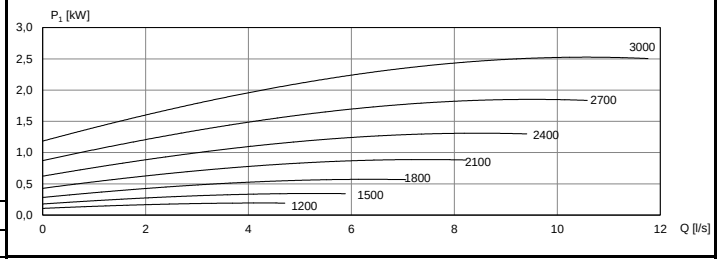

Motor	P_{2N} [kW]	$I_{In,Max}$ [A] (1x230V)	[kg]	H [mm]
KH-101 D1 F19	2,2	20,0	58	600

L-65B/2 NC	LH-65B/2 NC	LS-65B/2 NC		

DN65	1200 - 3000 r/min	Ø148	1~230 V

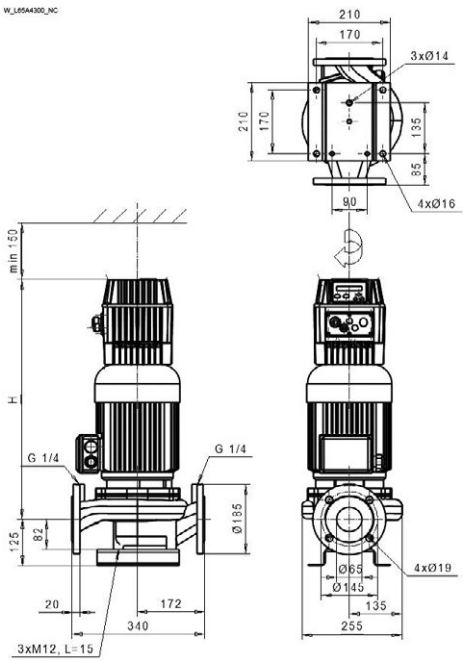

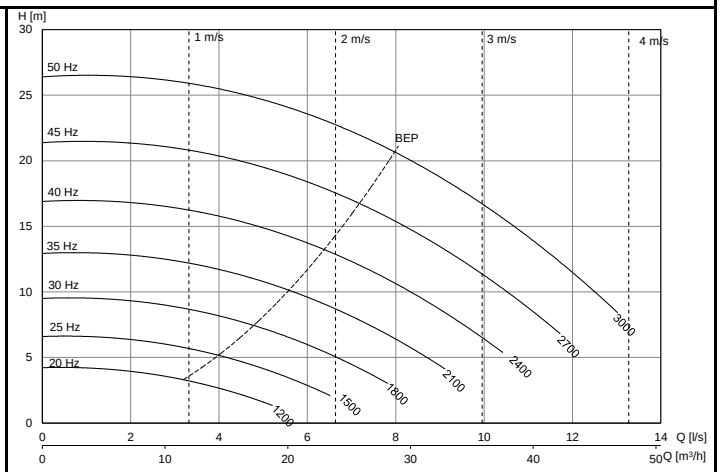

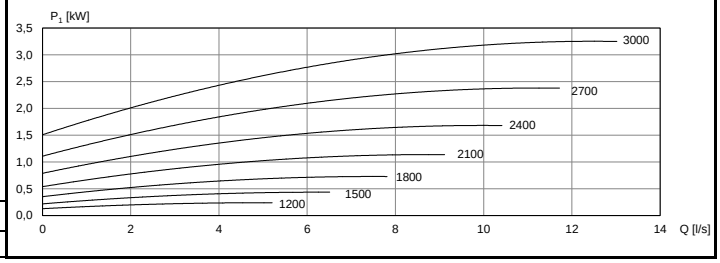

Motor	P_{2N} [kW]	$I_{In,Max}$ [A] (1x230V)	[kg]	H [mm]
KH-112 C1 F19	3	20,0	64	645

L-65B/2 NC | **LH-65B/2 NC** | **LS-65B/2 NC**

DN65	1200 - 3000 r/min	Ø160	3~400 V

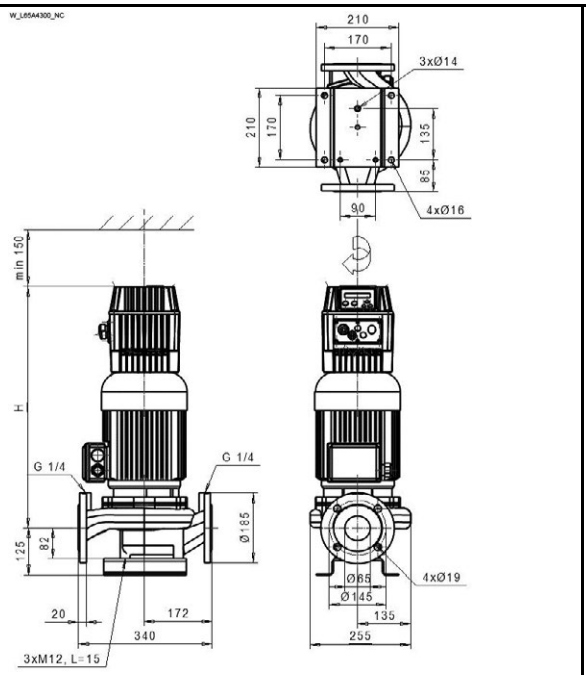

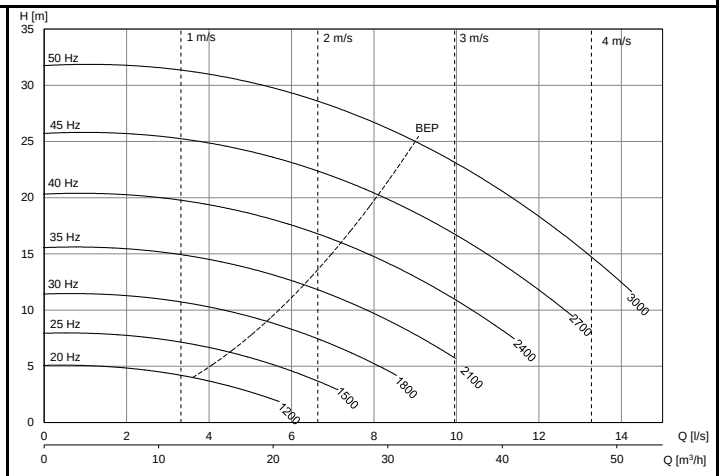

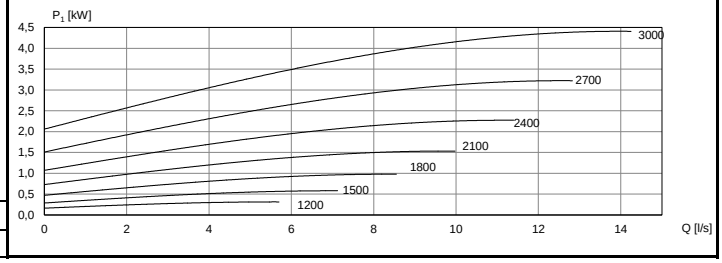

Motor	P_{2N} [kW]	$I_{In,Max}$ [A] (3x400V)	[kg]	H [mm]
KH-112 E1 F19	4	13,5	68	645

L-65B/2 NC | **LH-65B/2 NC** | **LS-65B/2 NC**

DN65	1200 - 3000 r/min	Ø174	3~400 V

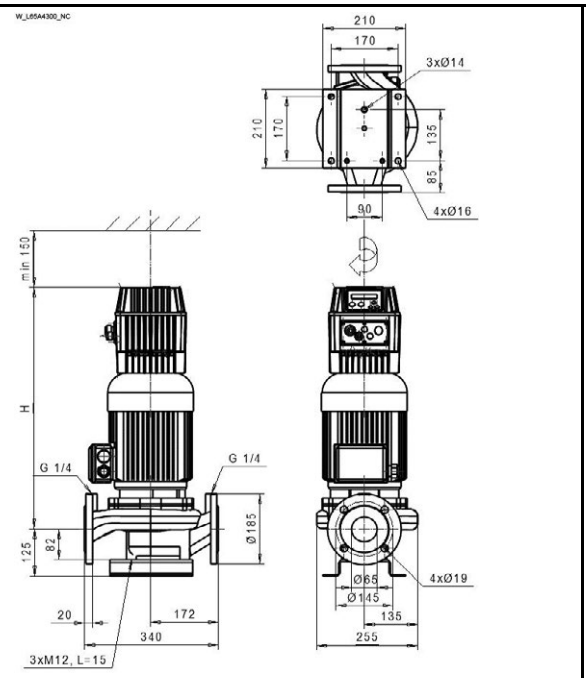

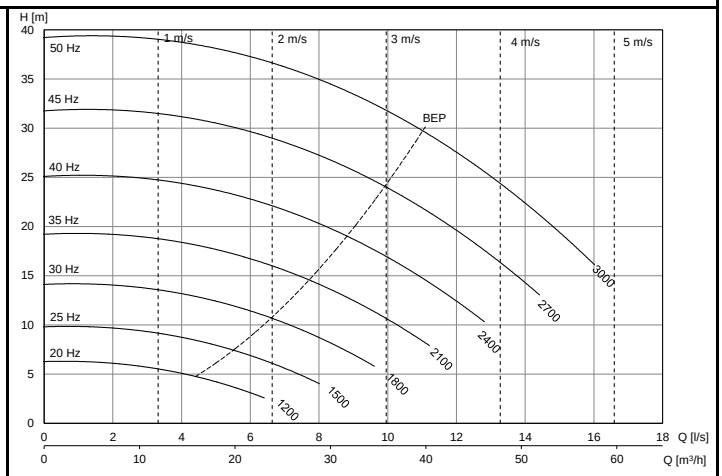

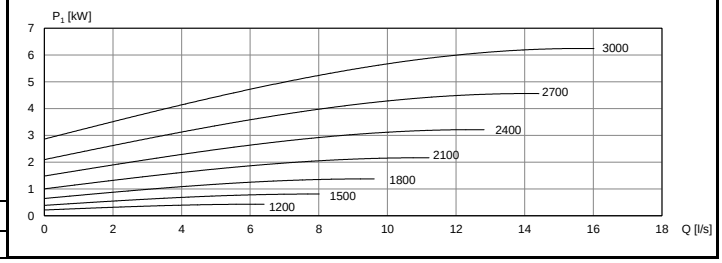

Motor	P_{2N} [kW]	$I_{In,Max}$ [A] (3x400V)	[kg]	H [mm]
KH-132 C1 F19	5,5	16,0	95	655

L-65B/2 NC | **LH-65B/2 NC** | **LS-65B/2 NC**

DN65	1200 - 3000 r/min	Ø184	3~400 V

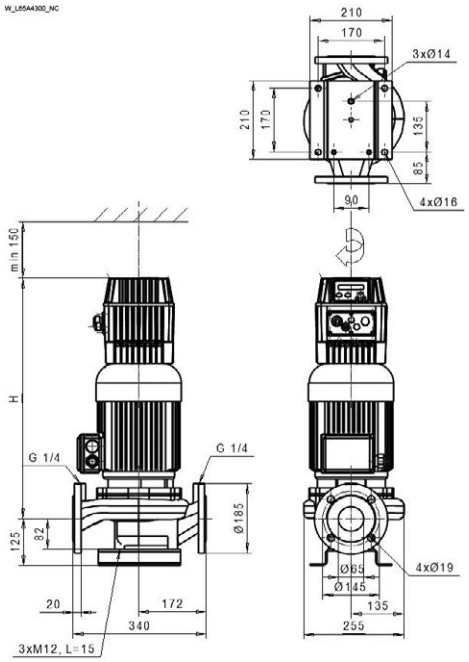

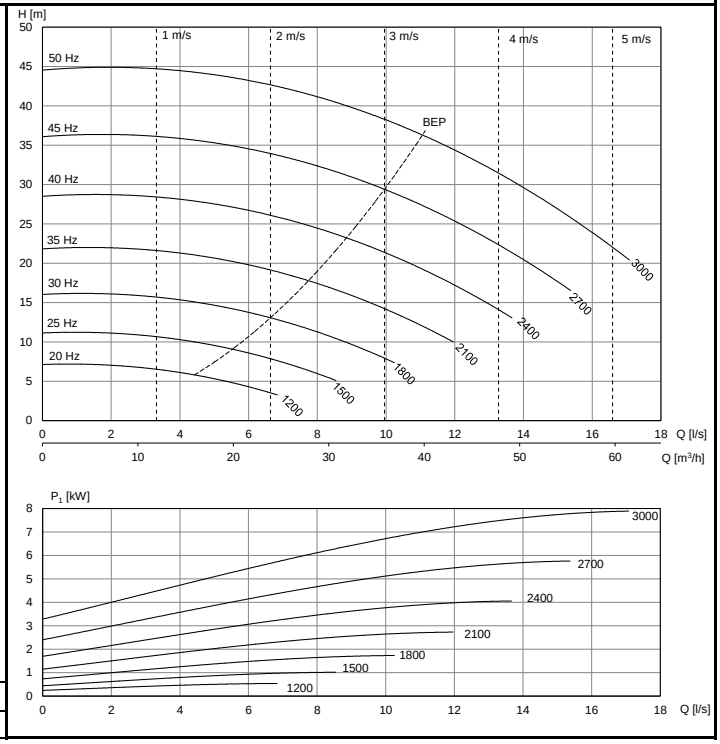

Motor	P_{2N} [kW]	$I_{In,Max}$ [A] (3x400V)	[kg]	H [mm]
KP-132 E1 F19	7,5	21,0	103	655

L-80A/4 NC | **LH-80A/4 NC**

DN80	600 - 1500 r/min	Ø176	1~230 V

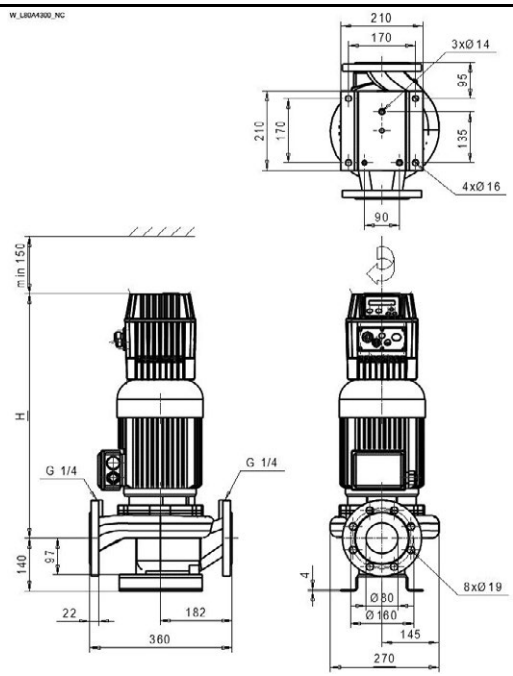

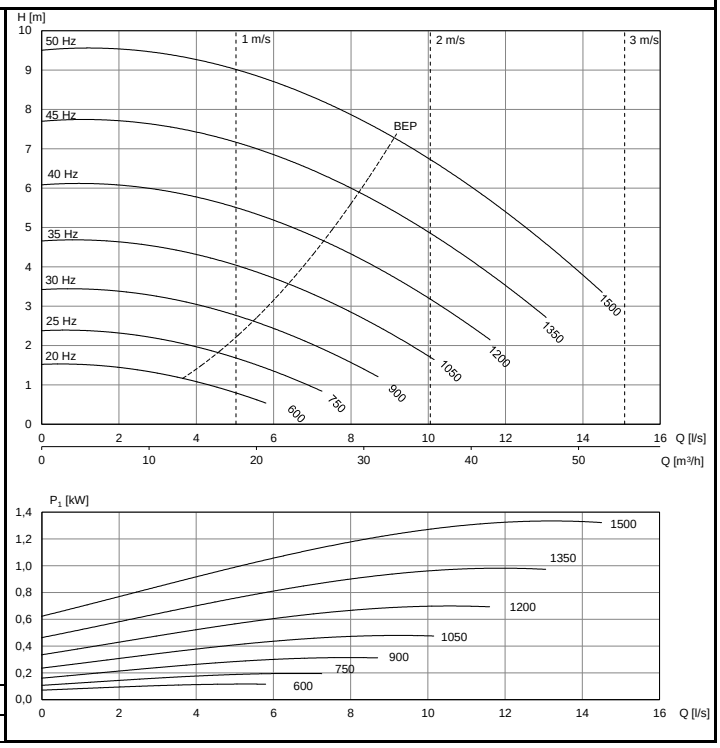

Motor	P_{2N} [kW]	$I_{In,Max}$ [A] (1x230V)	[kg]	H [mm]
KH-101 C2 F19	1,1	15,0	60	605

L-80A/4 NC | **LH-80A/4 NC**

DN80	600 - 1500 r/min	Ø188	1~230 V

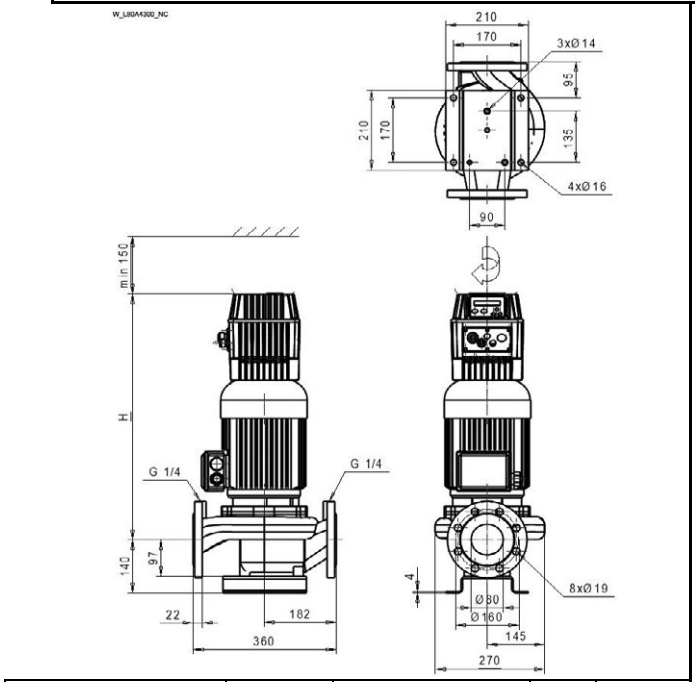

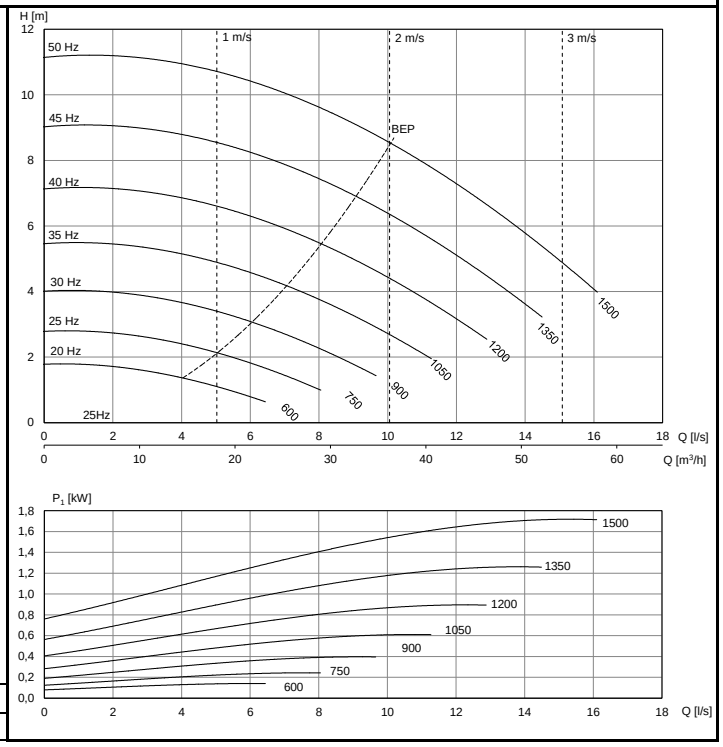

Motor	P_{2N} [kW]	$I_{In,Max}$ [A] (1x230V)	[kg]	H [mm]
KH-101 D2 F19	1,5	15,0	64	605

L-80A/4 NC | **LH-80A/4 NC**

DN80	600 - 1650 r/min	Ø188	1~230 V

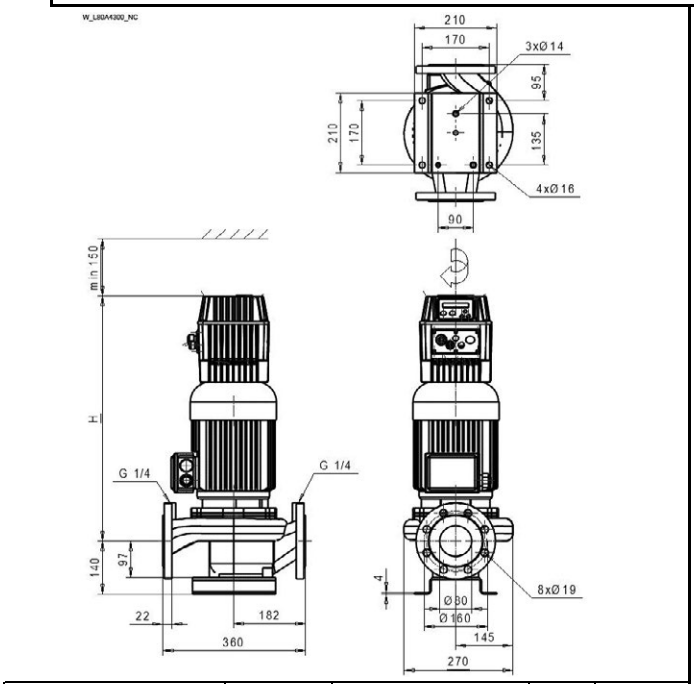

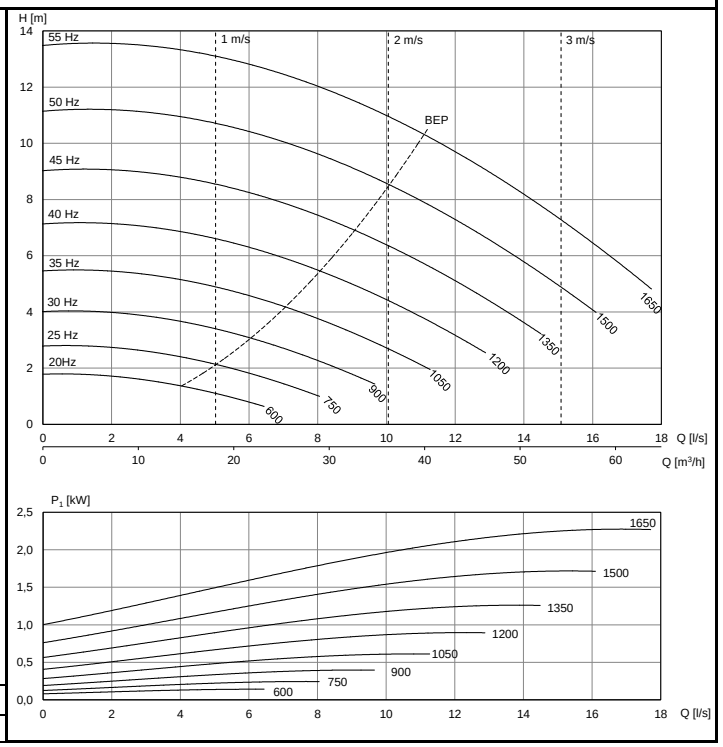

Motor	P_{2N} [kW]	$I_{In,Max}$ [A] (1x230V)	[kg]	H [mm]
KH-112 C2 F19	2,2	20,0	66	650

L-80A/4 NC | LH-80A/4 NC

DN80	600 - 1950 r/min	Ø188	1~230 V

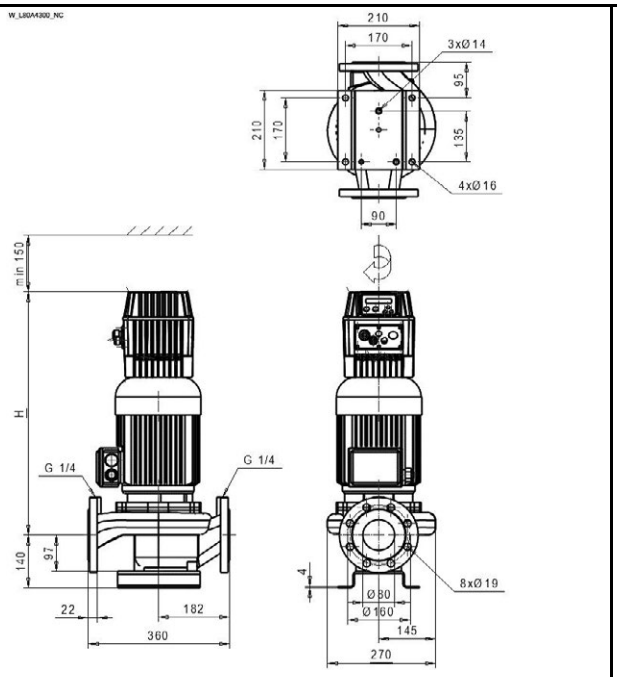

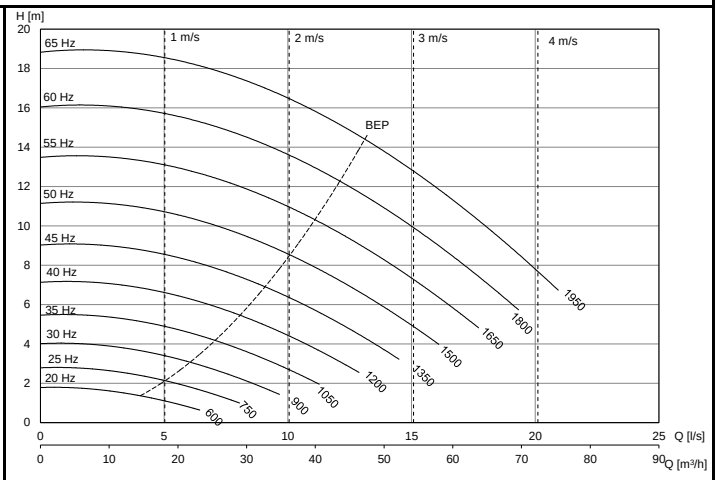

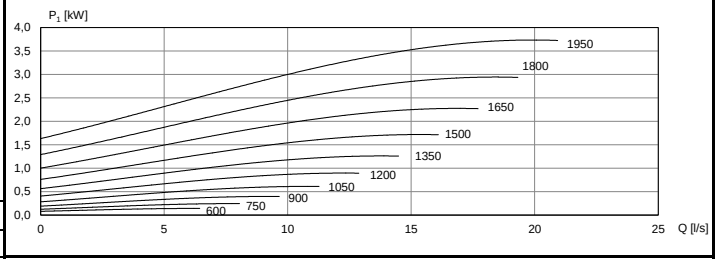

Motor	P_{2N} [kW]	$I_{In,Max}$ [A] (1x230V)	[kg]	H [mm]
KH-112 E2 F19	3	20,0	70	650

L-80A/2 NC | LH-80A/2 NC

DN80	1200 - 3000 r/min	Ø141	3~400 V

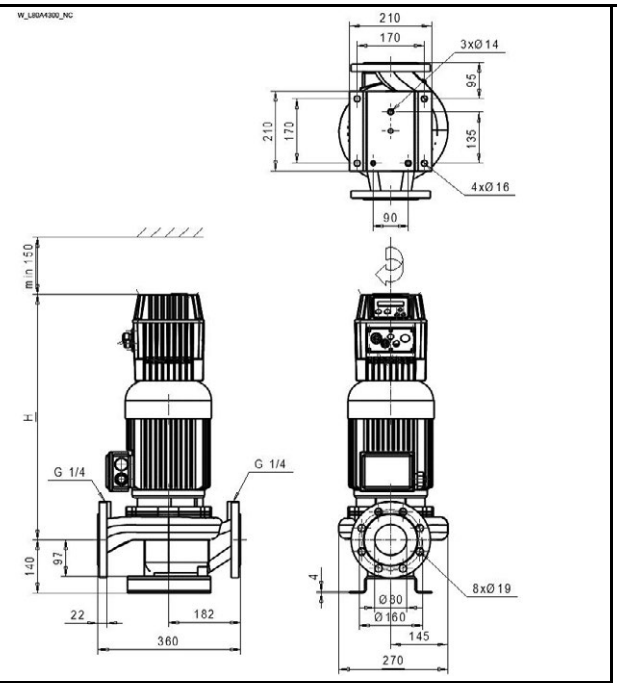

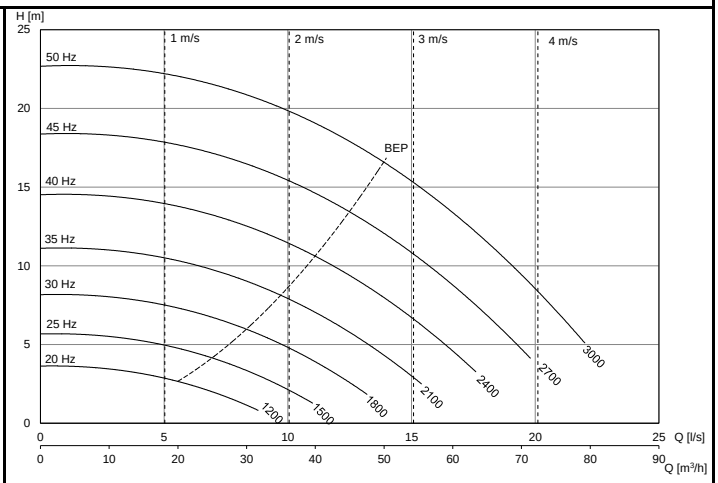

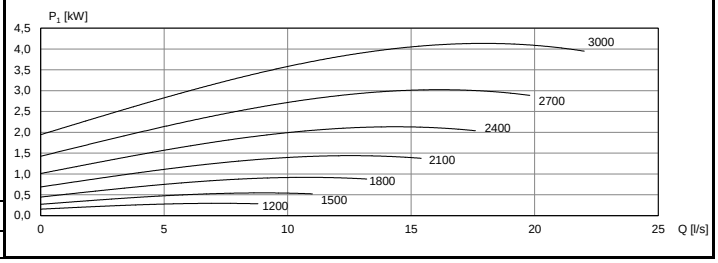

Motor	P_{2N} [kW]	$I_{In,Max}$ [A] (3x400V)	[kg]	H [mm]
KH-112 E1 F19	4	13,5	74	650

L-80A/2 NC | **LH-80A/2 NC**

DN80	1200 - 3000 r/min	Ø156	3~400 V

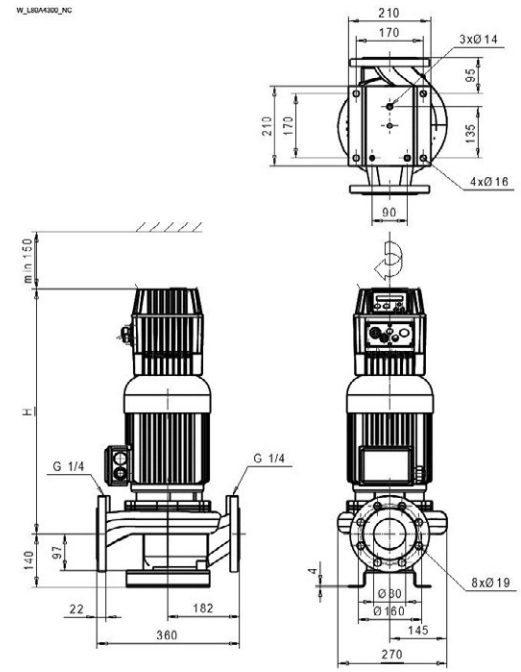

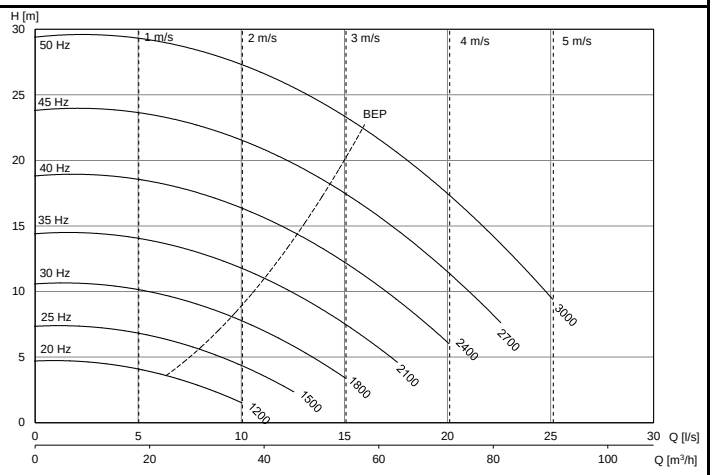

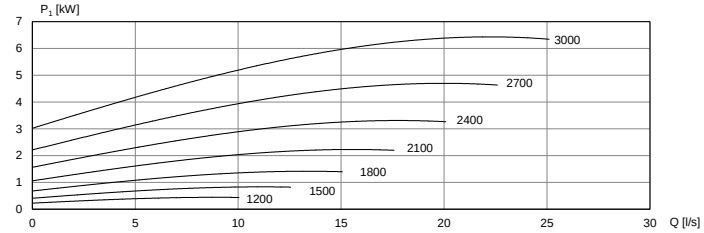

Motor	P_{2N} [kW]	$I_{In,Max}$ [A] (3x400V)	[kg]	H [mm]
KH-132 C1 F19	5,5	16,0	101	660

L-80A/2 NC | **LH-80A/2 NC**

DN80	1200 - 3000 r/min	Ø166	3~400 V

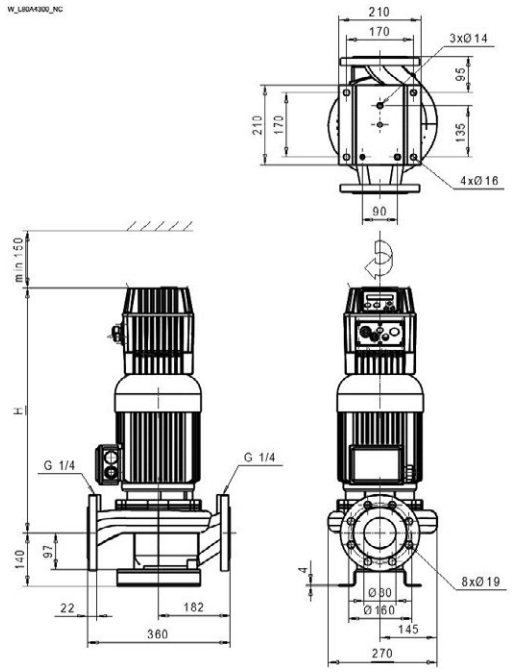

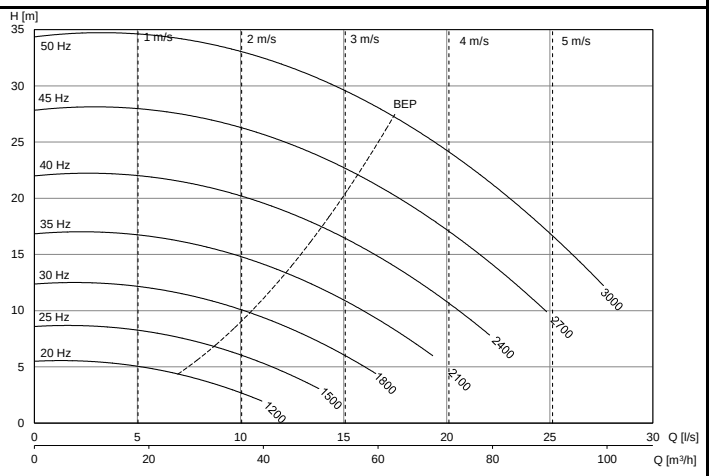

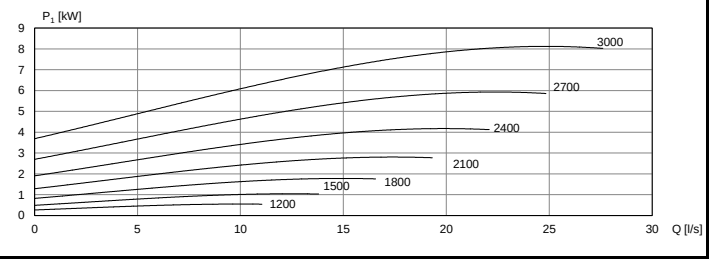

Motor	P_{2N} [kW]	$I_{In,Max}$ [A] (3x400V)	[kg]	H [mm]
KP-132 E1 F19	7,5	21,0	108	660

L-80S/4 NC	LH-80S/4 NC			

DN80	600 - 1500 r/min	Ø210	1~230 V

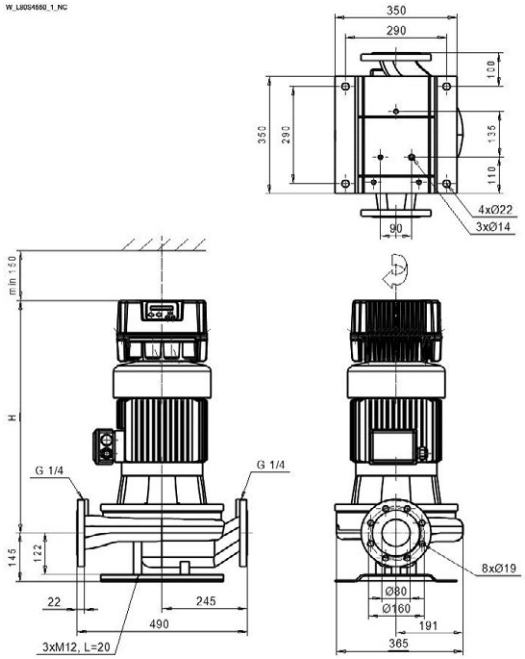

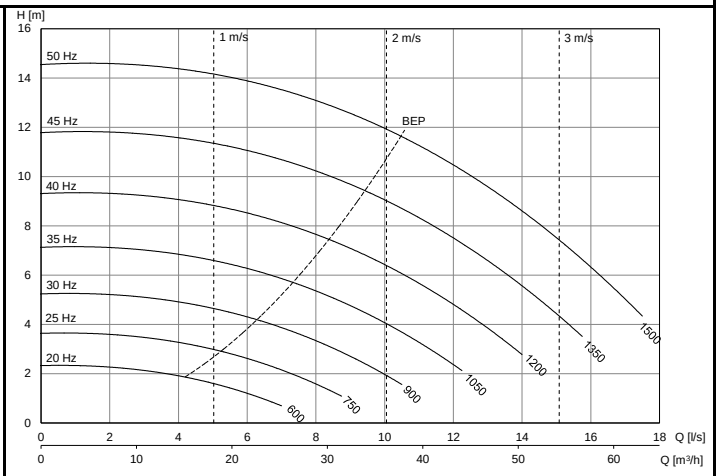

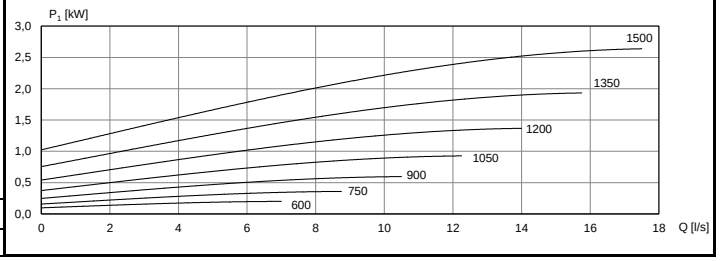

Motor	P_{2N} [kW]	$I_{In,Max}$ [A] 1x230V)	[kg]	H [mm]
KH-112 C2 F29	2,2	20,0	108	705

L-80S/4 NC	LH-80S/4 NC			

DN80	600 - 1500 r/min	Ø225	1~230 V

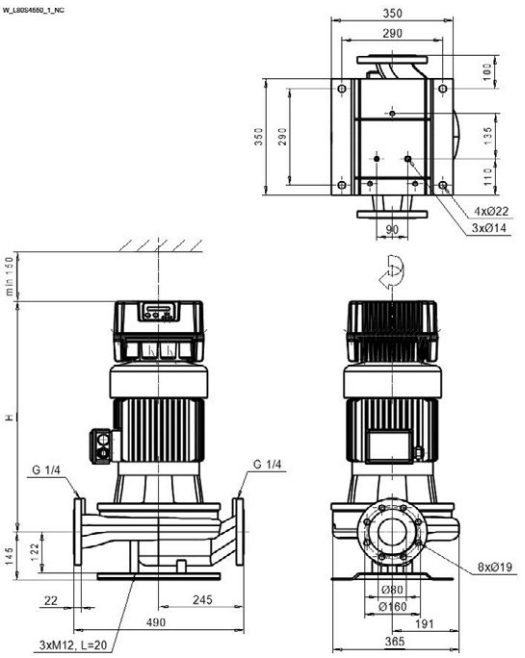

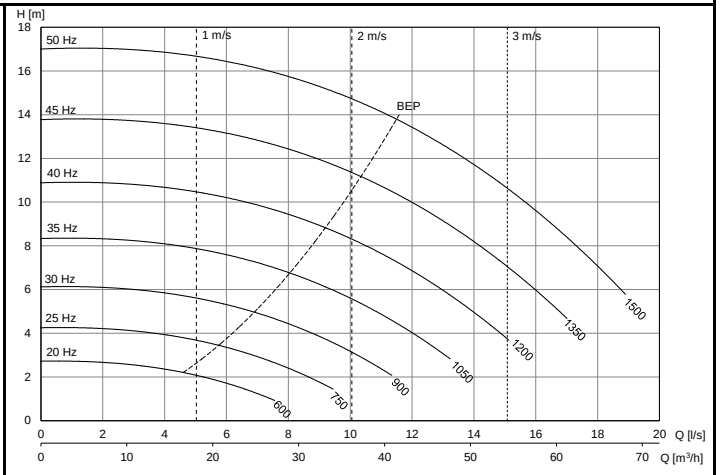

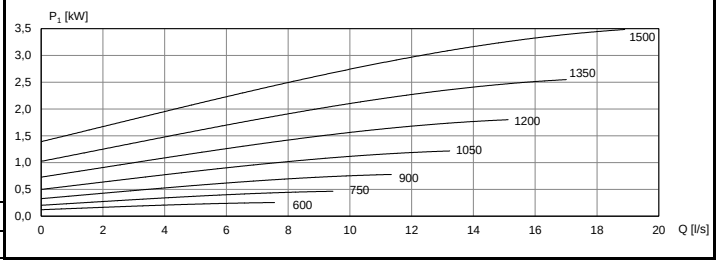

Motor	P_{2N} [kW]	$I_{In,Max}$ [A] (1x230V)	[kg]	H [mm]
KH-112 E2 F29	3	20,0	114	705

L-80S/4 NC | **LH-80S/4 NC**

DN80	600 - 1500 r/min	Ø245	3~400 V

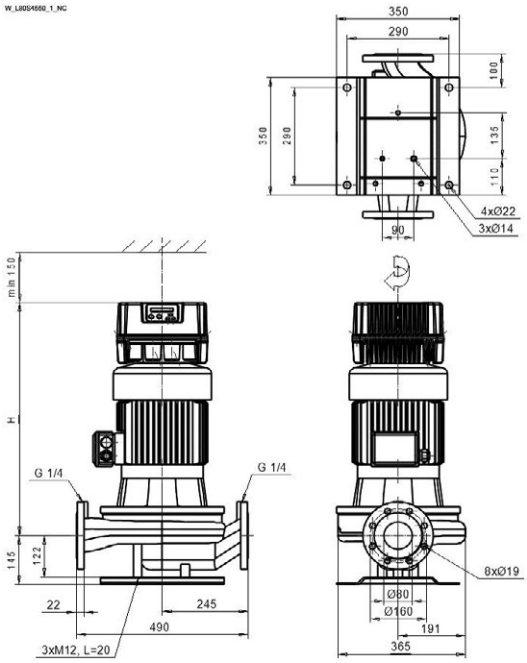

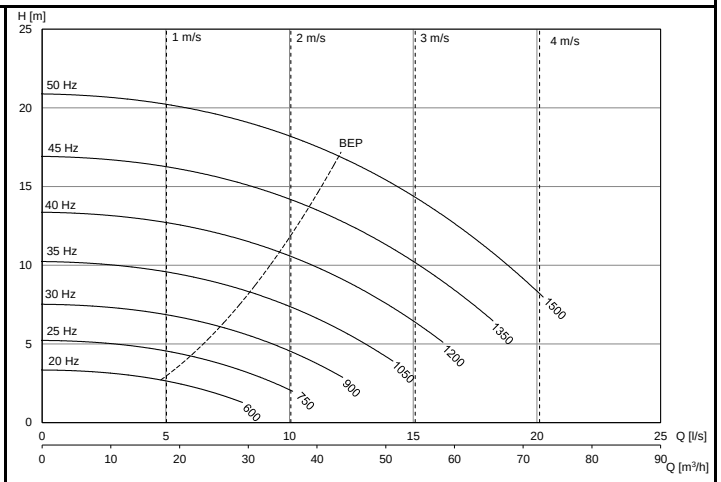

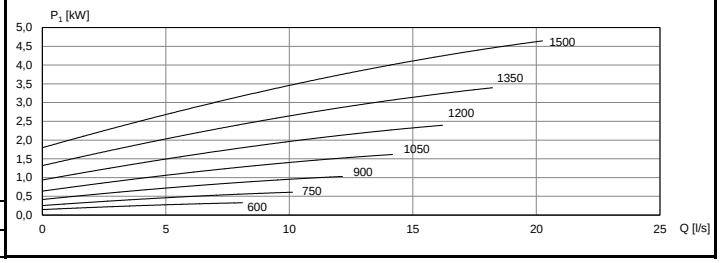

Motor	P_{2N} [kW]	$I_{In,Max}$ [A] (3x400V)	[kg]	H [mm]
KH-132 C2 F29	4	13,5	134	750

L-80S/4 NC | **LH-80S/4 NC**

DN80	600 - 1500 r/min	Ø270	3~400 V

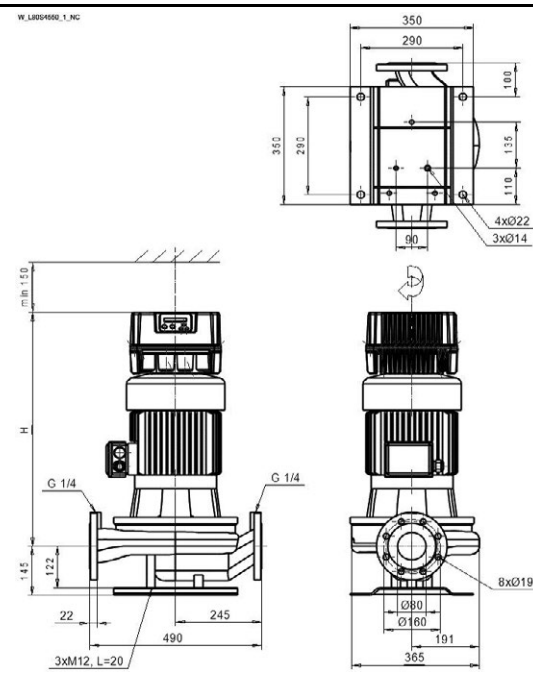

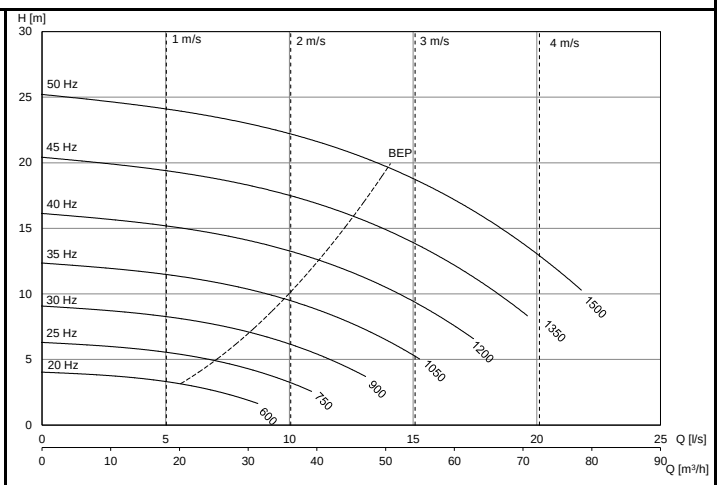

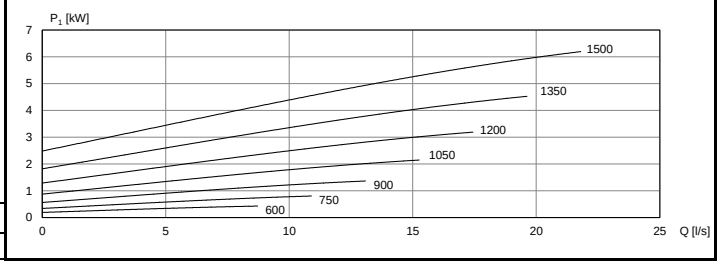

Motor	P_{2N} [kW]	$I_{In,Max}$ [A] (3x400V)	[kg]	H [mm]
KH-132 E2 F29	5,5	16,0	147	700

L-80S/4 NC | **LH-80S/4 NC**

DN80	600 - 1650 r/min	Ø270	3~400 V

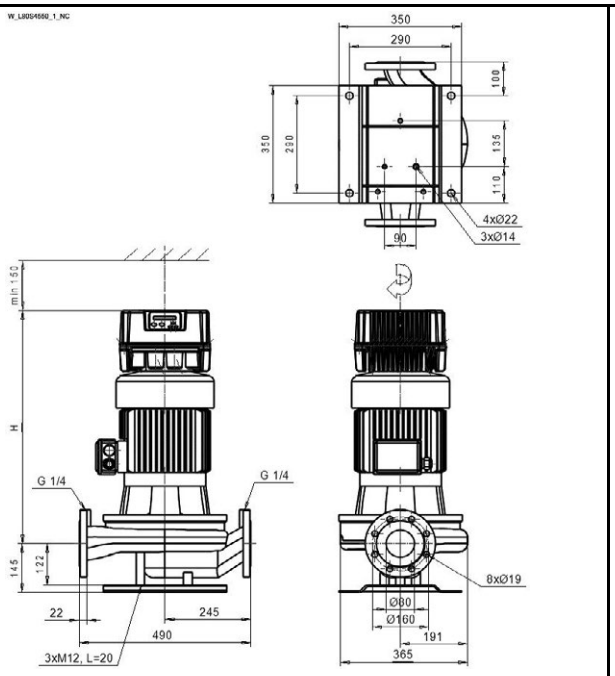

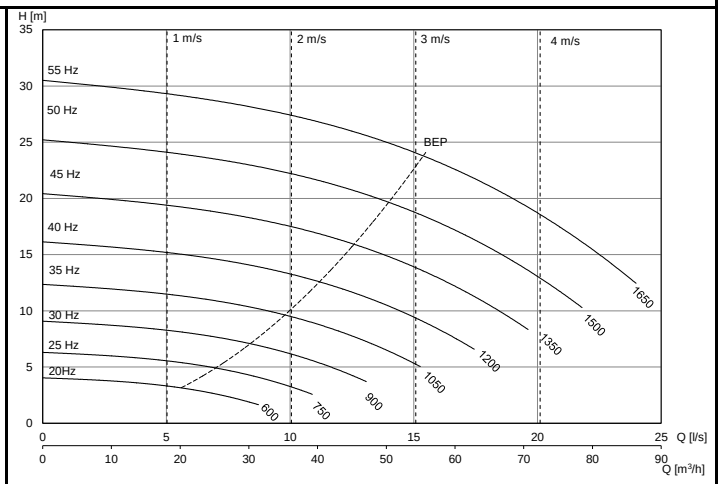

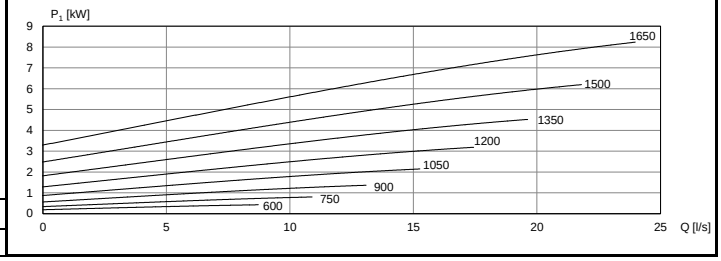

Motor	P_{2N} [kW]	$I_{In,Max}$ [A] (3x400V)	[kg]	H [mm]
KP-134 H2 F29	7,5	21,0	178	750

AL-1102/4 NC | **ALH-1102/4 NC** | **ALP-1102/4 NC** | **ALS-1102/4 NC**

DN100	600 - 1500 r/min	Ø160	1~230 V

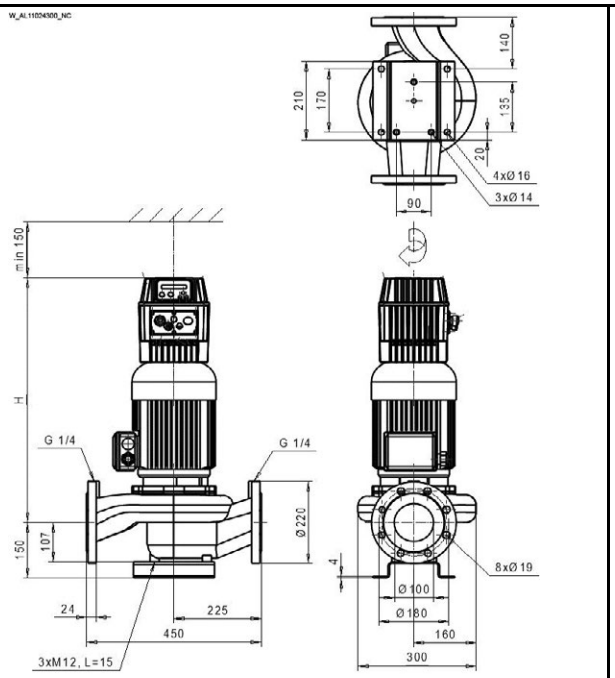

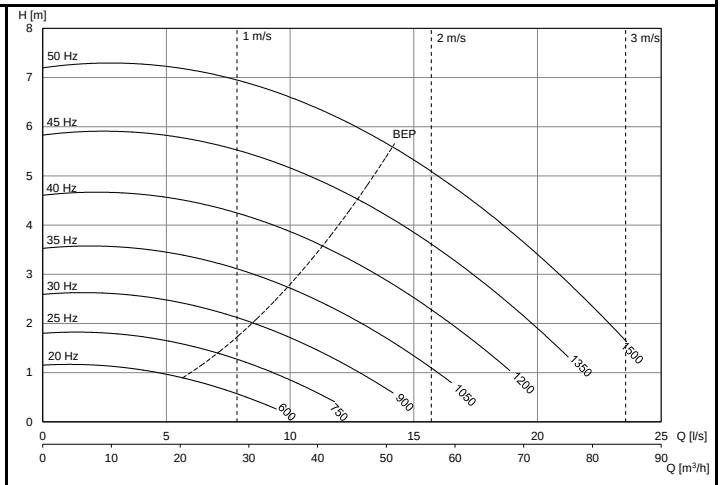

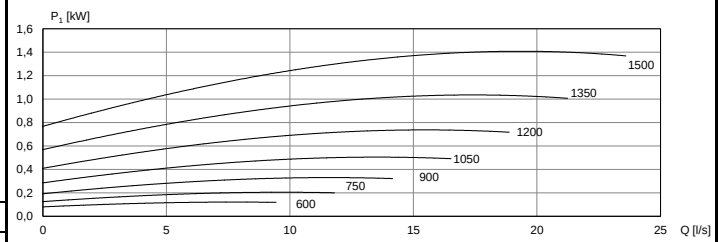

Motor	P_{2N} [kW]	$I_{In,Max}$ [A] (1x230V)	[kg]	H [mm]
KH-101 C2 F19	1,1	15,0	68	615

AL-1102/4 NC | **ALH-1102/4 NC** | **ALP-1102/4 NC** | **ALS-1102/4 NC**

DN100	600 - 1500 r/min	Ø172	1~230 V

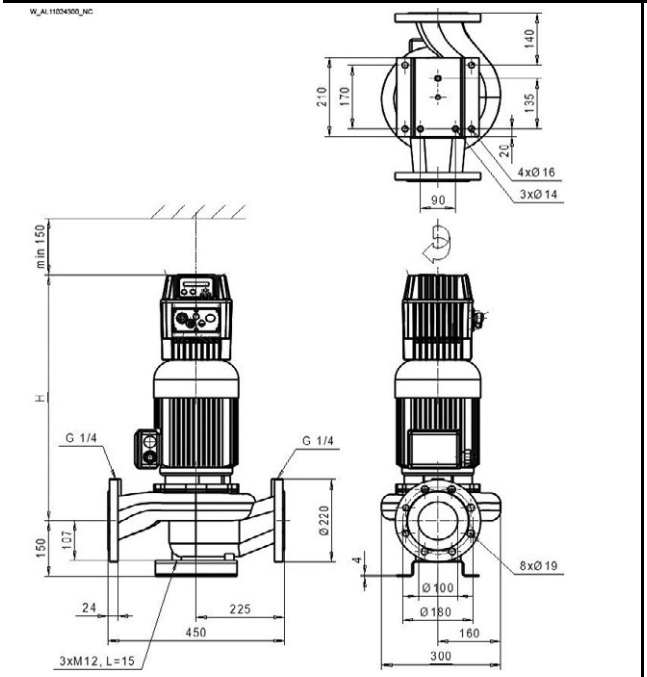

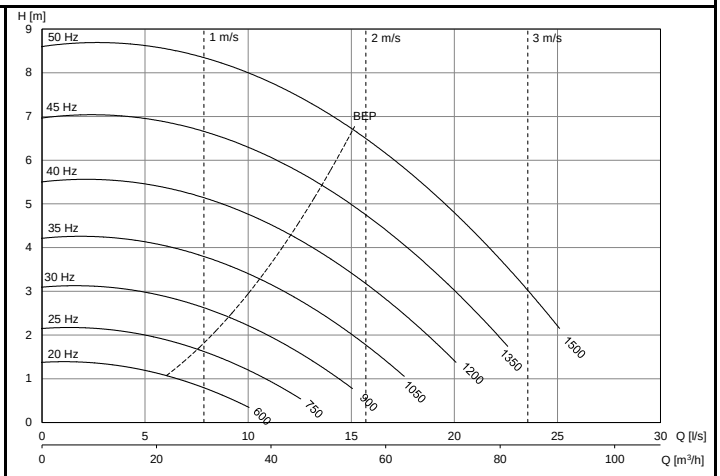

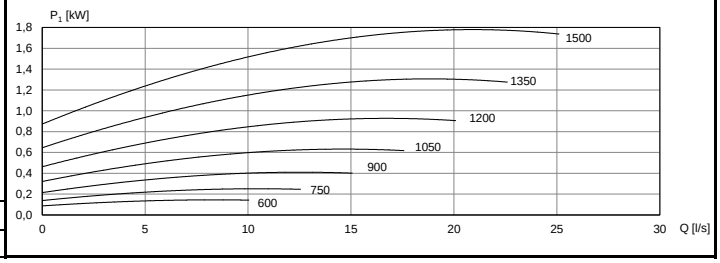

Motor	P_{2N} [kW]	$I_{In,Max}$ [A] (1x230V)	[kg]	H [mm]
KH-101 D2 F19	1,5	15,0	72	615

AL-1102/4 NC | **ALH-1102/4 NC** | **ALP-1102/4 NC** | **ALS-1102/4 NC**

DN100	600 - 1500 r/min	Ø188	1~230 V

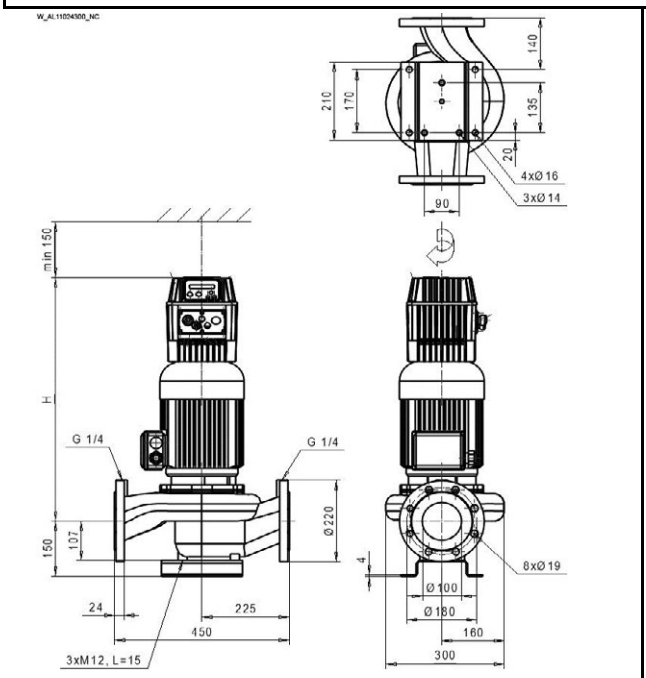

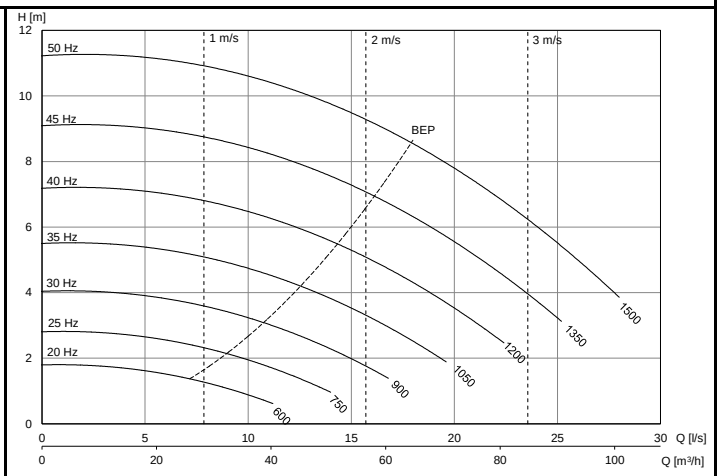

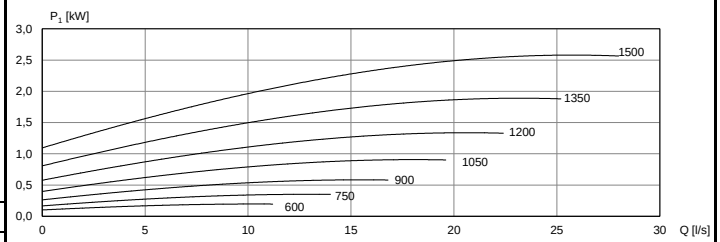

Motor	P_{2N} [kW]	$I_{In,Max}$ [A] (1x230V)	[kg]	H [mm]
KH-112 C2 F19	2,2	20,0	75	660

AL-1102/4 NC | **ALH-1102/4 NC** | **ALP-1102/4 NC** | **ALS-1102/4 NC**

DN100	600 - 1650 r/min	Ø188	1~230 V

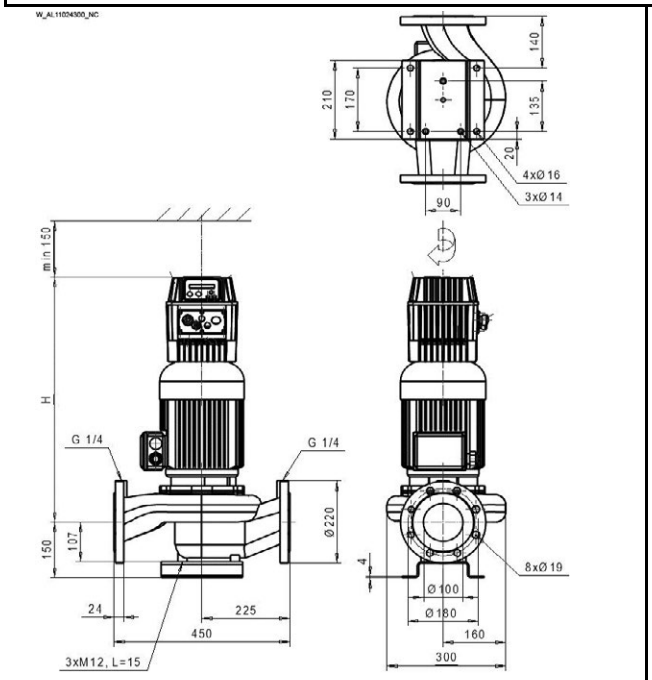

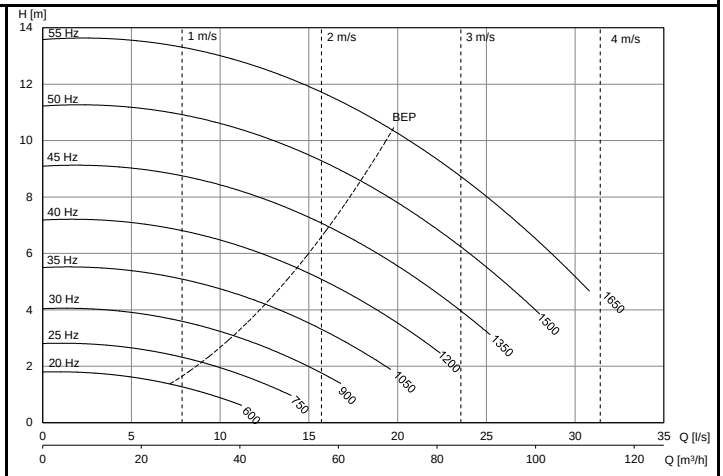

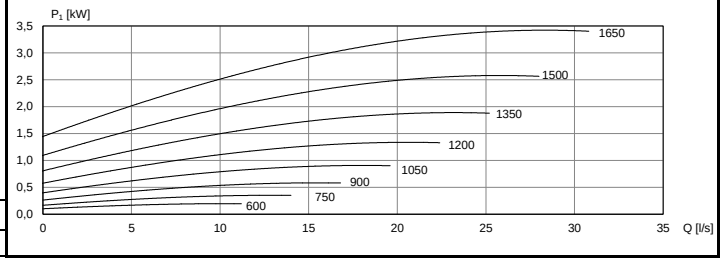

Motor	P_{2N} [kW]	$I_{In,Max}$ [A] (1x230V)	[kg]	H [mm]
KH-112 E2 F19	3	20,0	78	660

AL-1102/2 NC | **ALH-1102/2 NC** | **ALP-1102/2 NC** | **ALS-1102/2 NC**

DN100	1200 - 3000 r/min	Ø128	3~400 V

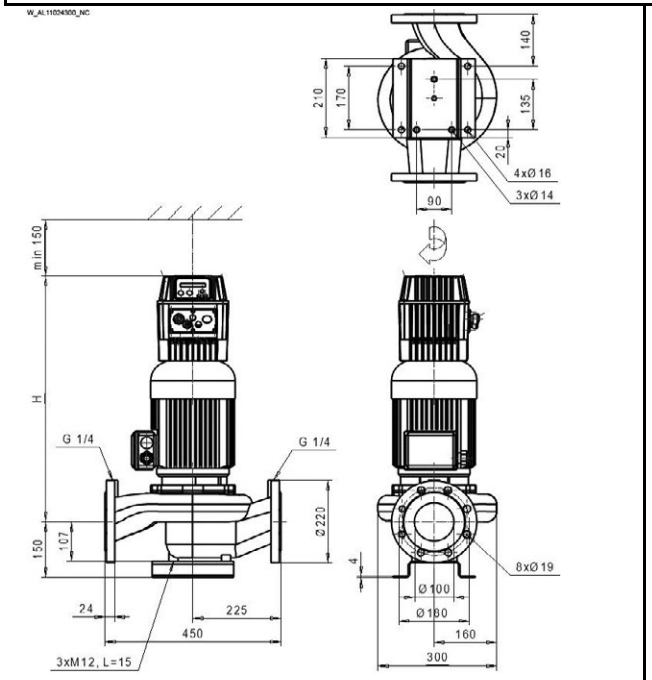

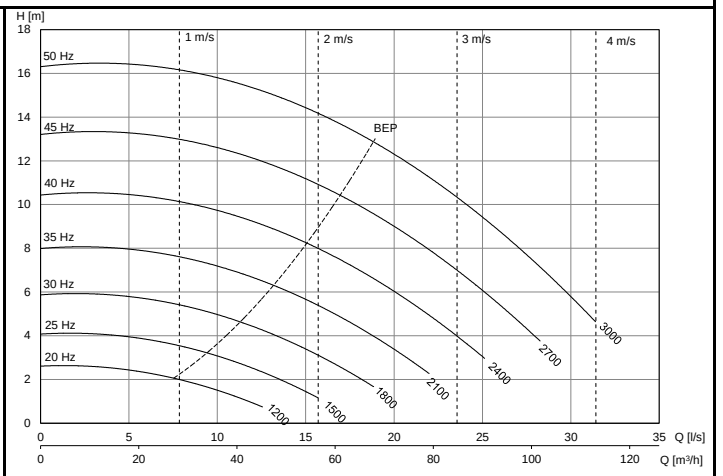

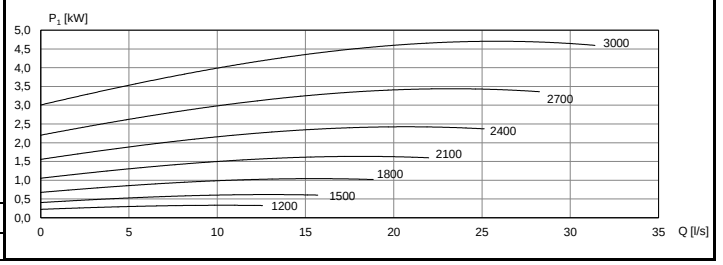

Motor	P_{2N} [kW]	$I_{In,Max}$ [A] (3x400V)	[kg]	H [mm]
KH-112 E1 F19	4	13,5	81	660

AL-1102/2 NC | **ALH-1102/2 NC** | **ALP-1102/2 NC** | **ALS-1102/2 NC**

DN100	1200 - 3000 r/min	Ø138	3~400 V

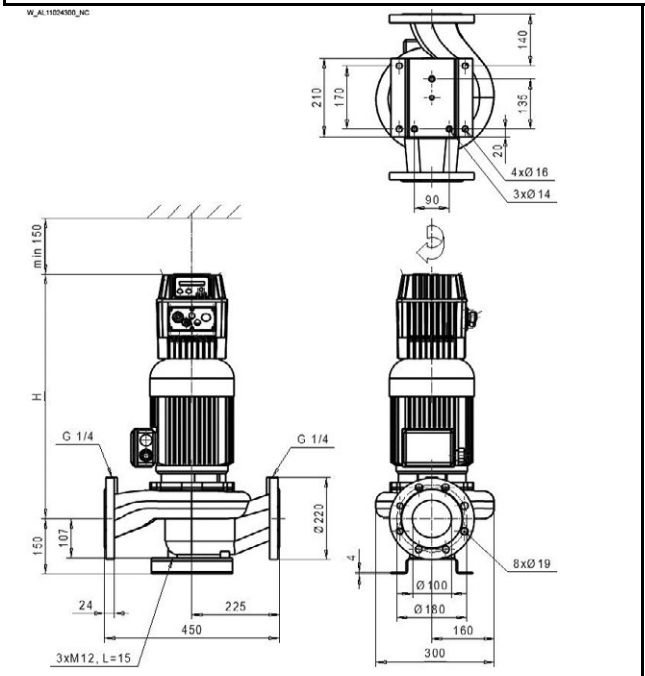

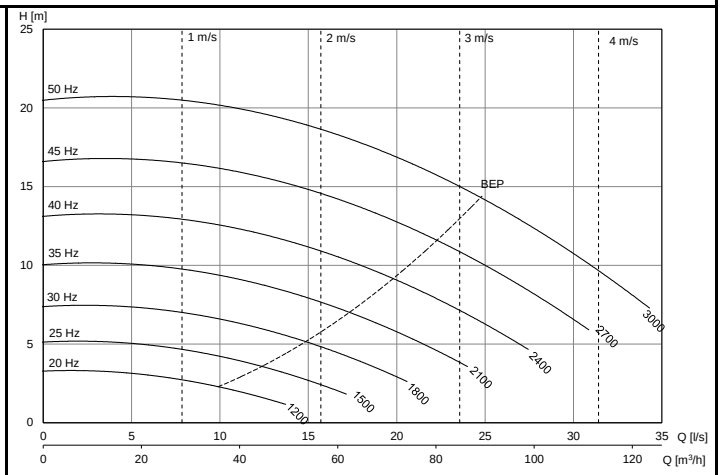

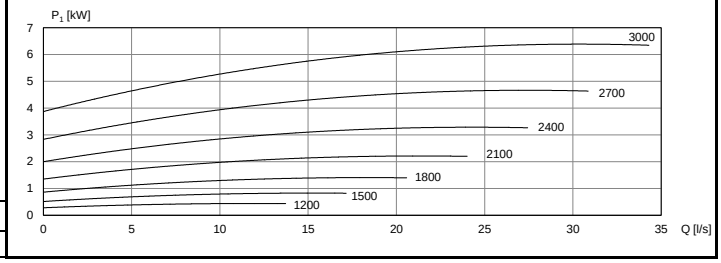

Motor	P_{2N} [kW]	$I_{In,Max}$ [A] (3x400V)	[kg]	H [mm]
KH-132 C1 F19	5,5	16,0	108	670

AL-1102/2 NC | **ALH-1102/2 NC** | **ALP-1102/2 NC** | **ALS-1102/2 NC**

DN100	1200 - 3000 r/min	Ø149	3~400 V

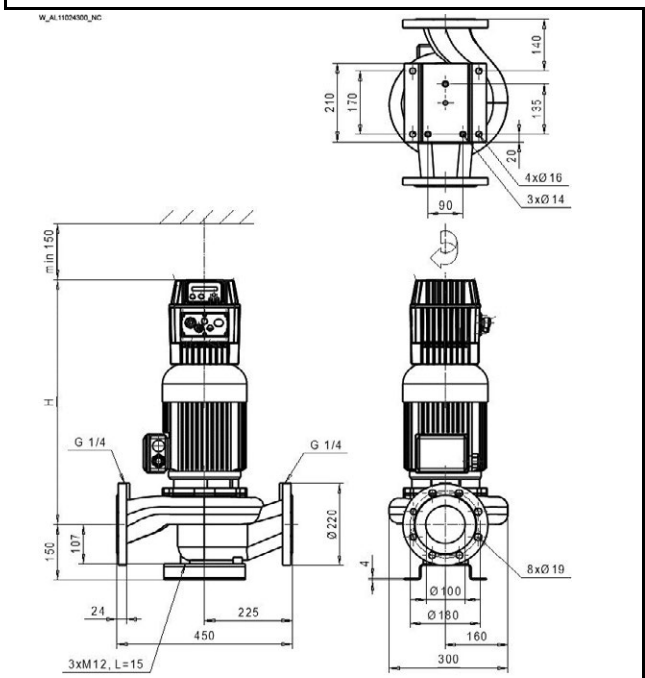

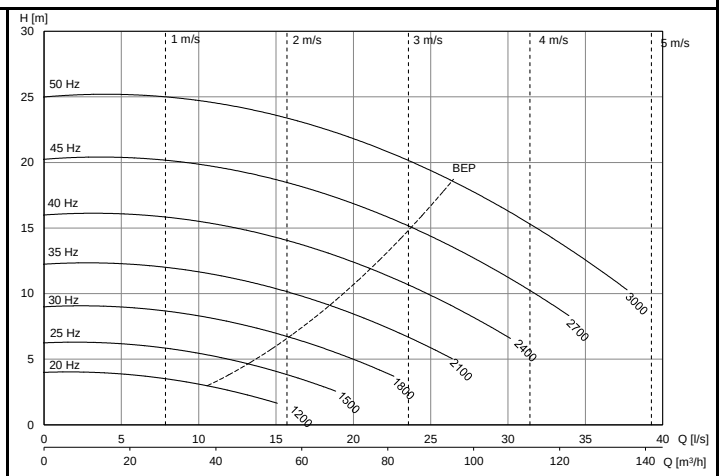

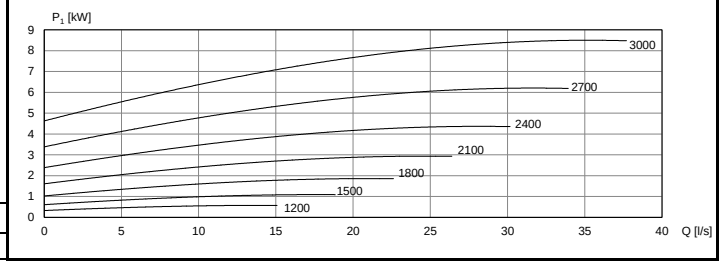

Motor	P_{2N} [kW]	$I_{In,Max}$ [A] (3x400V)	[kg]	H [mm]
KP-132 E1 F19	7,5	21,0	118	670

L-100S/4 NC | **LH-100S/4 NC**

DN100	600 - 1500 r/min	Ø225	3~400 V

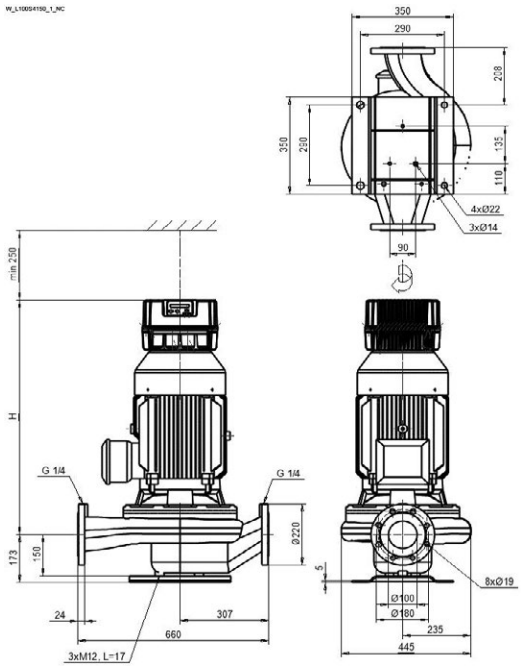

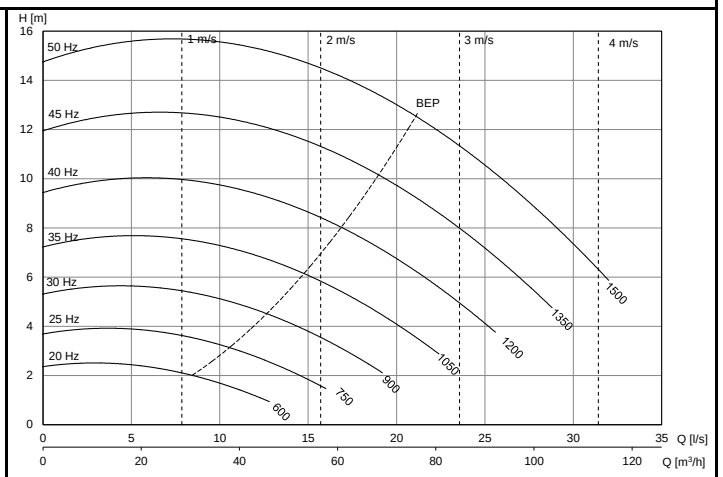

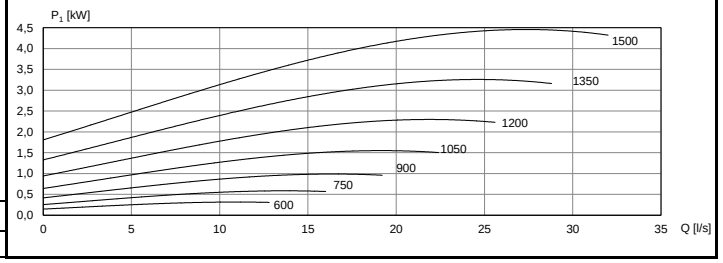

Motor	P_{2N} [kW]	$I_{In,Max}$ [A] (3x400V)	[kg]	H [mm]
KH-132 C2 F31	4	13,5	176	740

L-100S/4 NC | **LH-100S/4 NC**

DN100	600 - 1500 r/min	Ø247	3~400 V

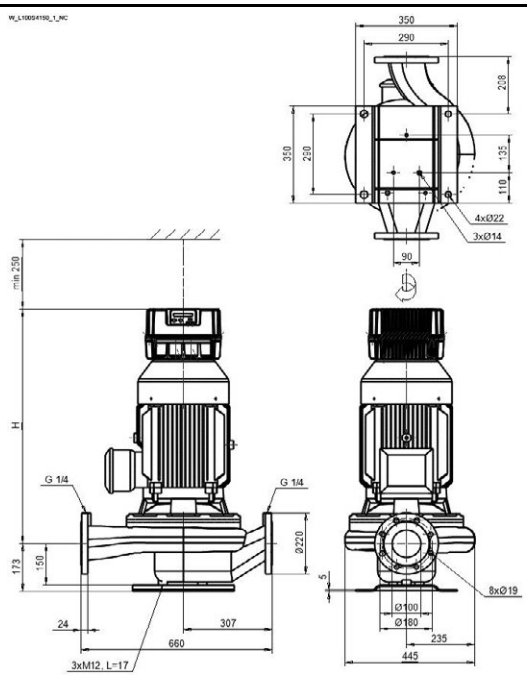

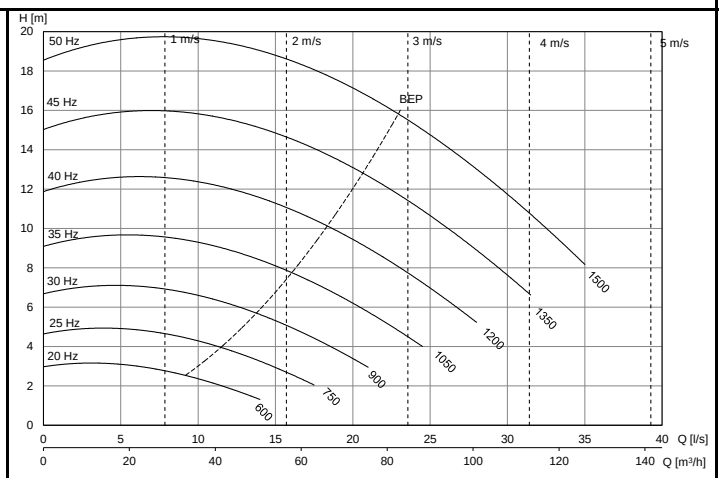

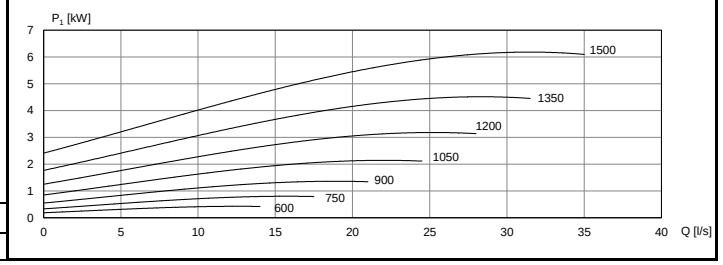

Motor	P_{2N} [kW]	$I_{In,Max}$ [A] (3x400V)	[kg]	H [mm]
KH-132 E2 F31	5,5	16,0	189	690

L-100S/4 NC | **LH-100S/4 NC**

DN100	600 - 1500 r/min	Ø270	3~400 V

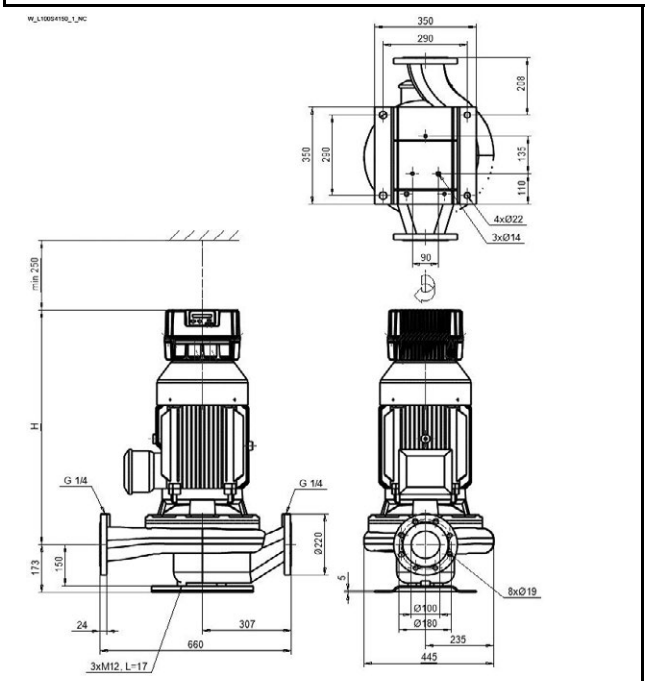

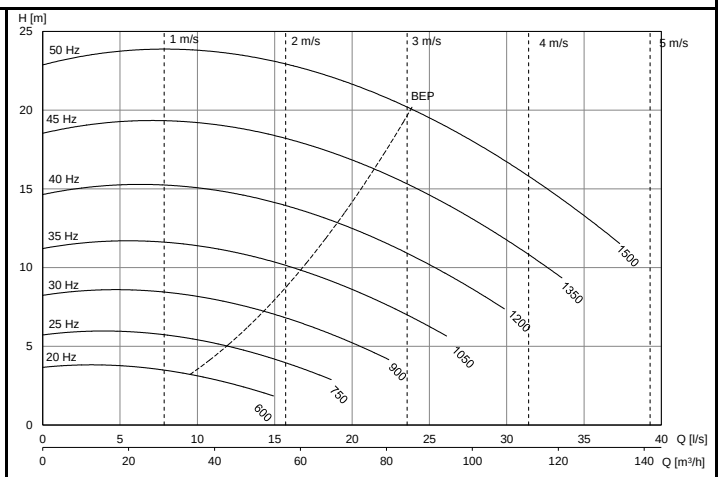

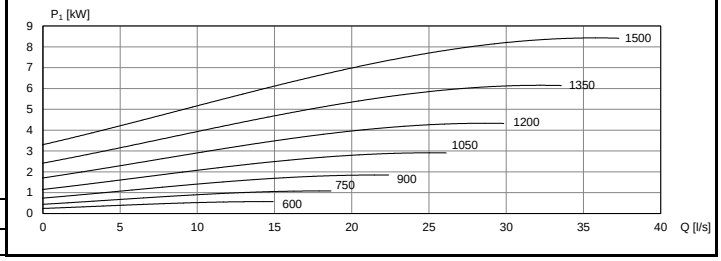

Motor	P_{2N} [kW]	$I_{In,Max}$ [A] (3x400V)	[kg]	H [mm]
KP-134 H2 F31	7,5	21,0	224	790

L-100S/4 NC | **LH-100S/4 NC**

DN100	600 - 1500 r/min	Ø300	3~400 V

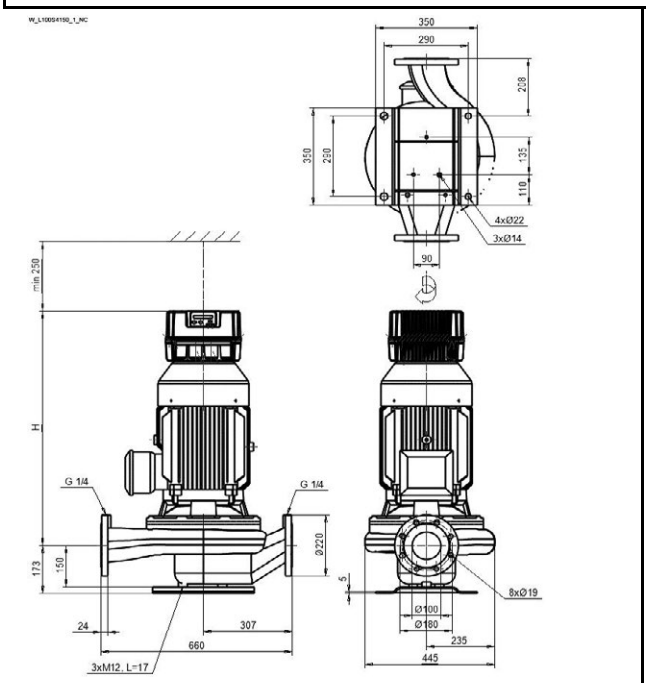

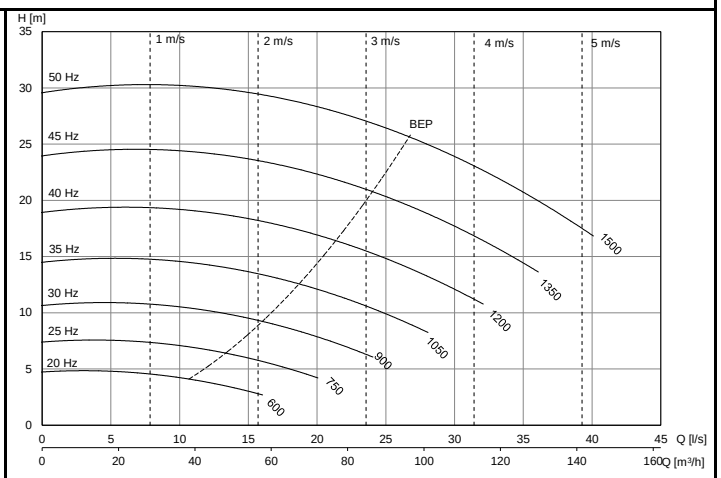

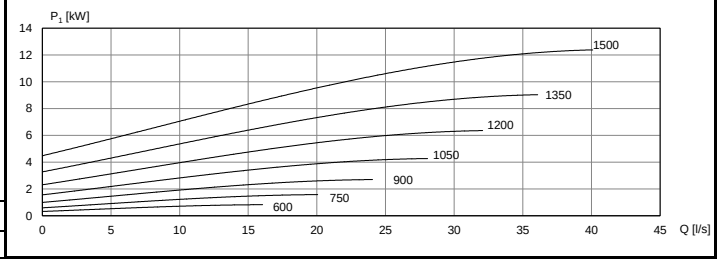

Motor	P_{2N} [kW]	$I_{In,Max}$ [A] (3x400V)	[kg]	H [mm]
KP-166 F2 F31	11	31,0	280	880

L-100S/4 NC | **LH-100S/4 NC**

DN100	600 - 1500 r/min	Ø315	3~400 V

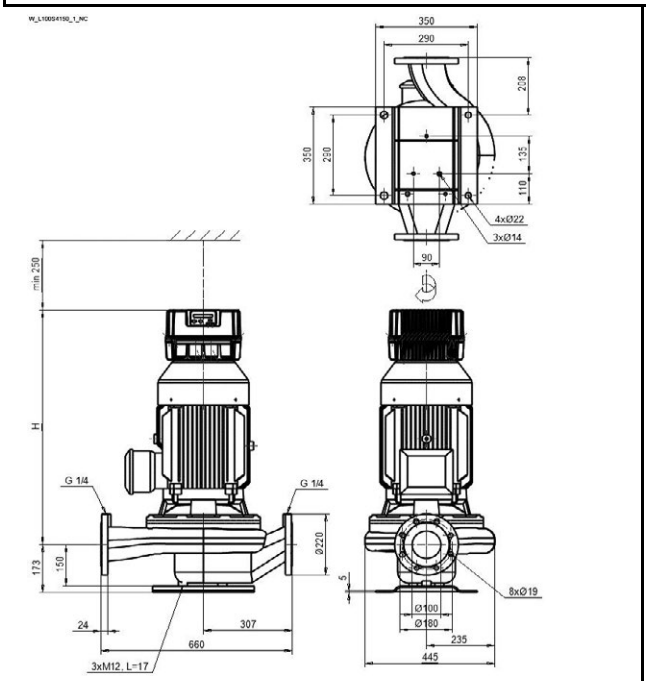

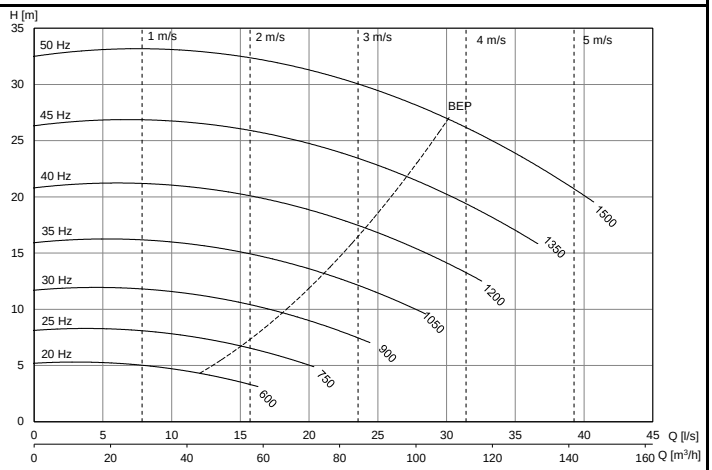

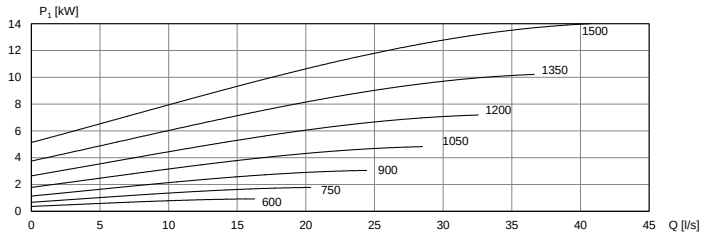

Motor	P_{2N} [kW]	$I_{In,Max}$ [A] (3x400V)	[kg]	H [mm]
KP-166 F2 F31	15	35,0	285	880

AKN-100/2 NC | **AKNH-100/2 NC**

DN100	1200 - 3000 r/min	Ø170	3~400 V

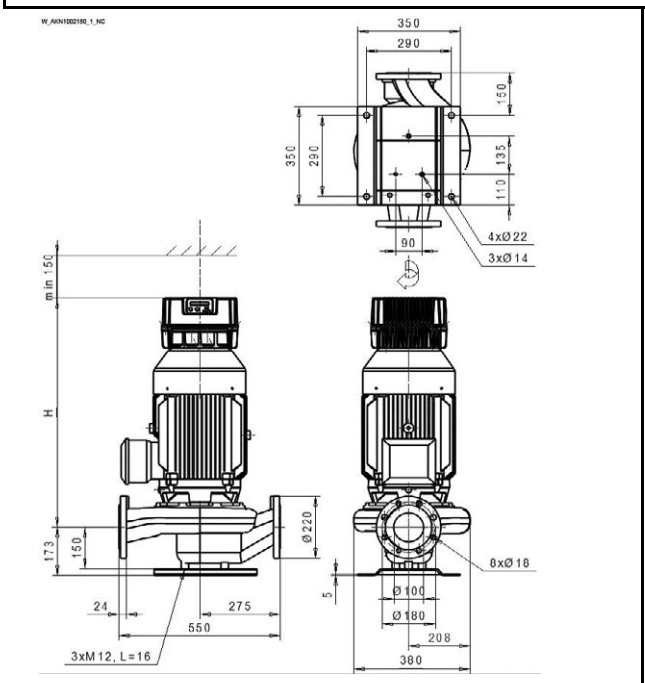

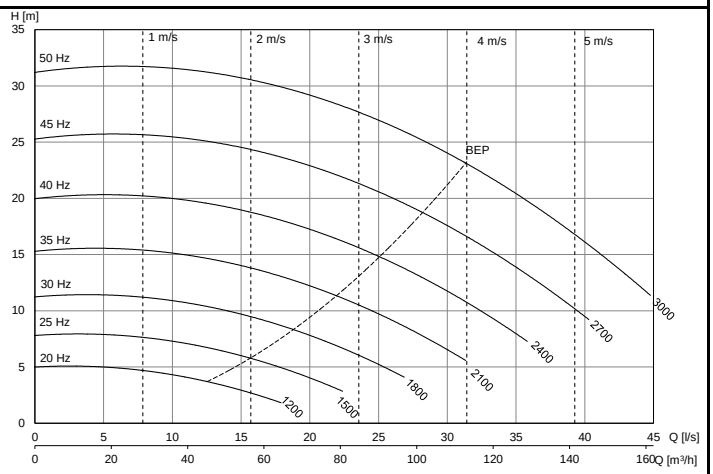

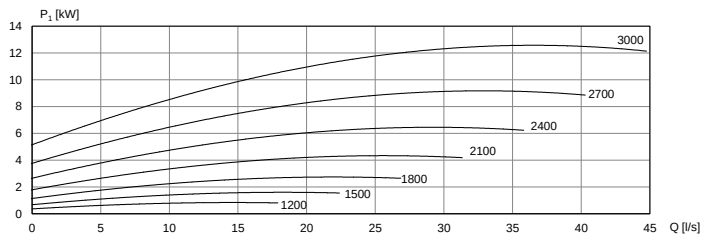

Motor	P_{2N} [kW]	$I_{In,Max}$ [A] (3x400V)	[kg]	H [mm]
KP-165 E1 N26	11	31,0	185	820

AKN-100/2 NC | **AKNH-100/2 NC**

DN100	1200 - 3000 r/min	Ø180	3~400 V

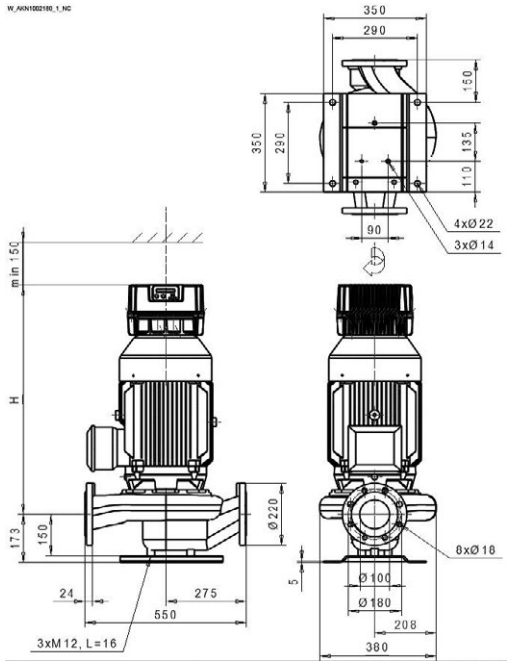

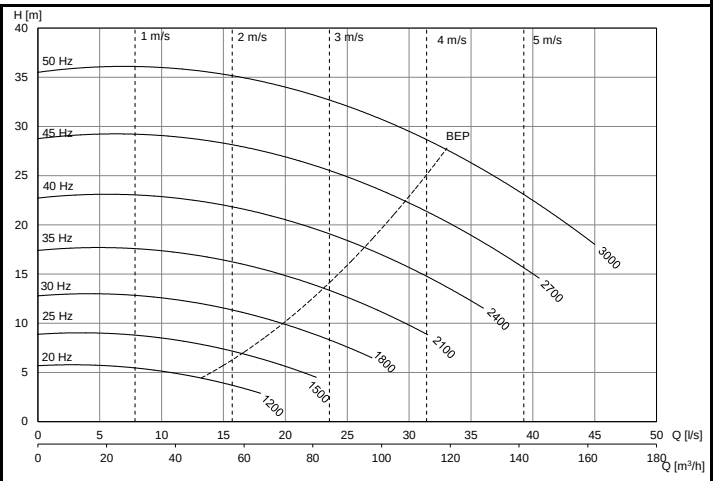

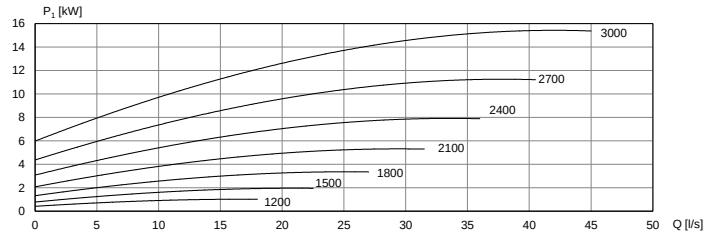

Motor	P_{2N} [kW]	$I_{In,Max}$ [A] (3x400V)	[kg]	H [mm]
KP-166 H1 N26	15	35,0	190	850

AL-1129/4 NC | **ALH-1129/4 NC** | **ALS-1129/4 NC**

DN125	600 - 1500 r/min	Ø183	1~230 V

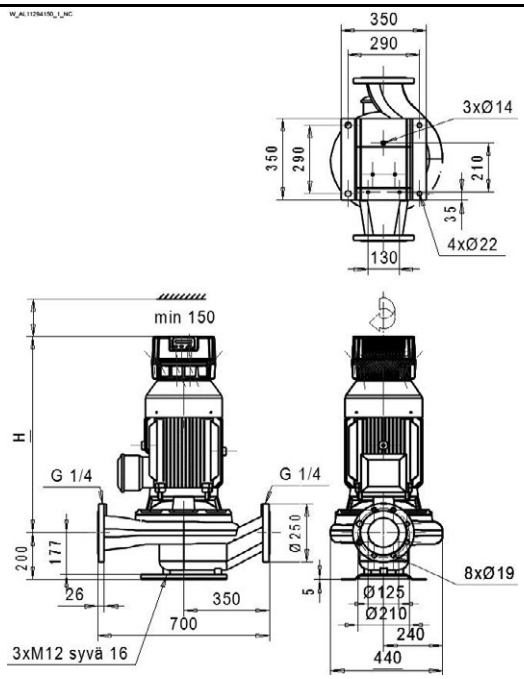

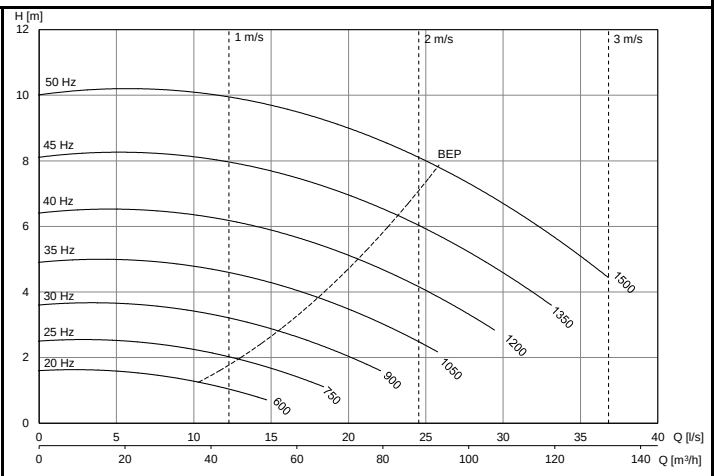

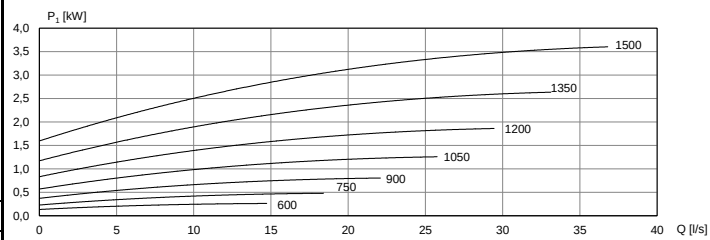

Motor	P_{2N} [kW]	$I_{In,Max}$ [A] (1x230V)	[kg]	H [mm]
KH-112 E2 F31	3	20,0	142	670

AL-1129/4 NC | **ALH-1129/4 NC** | **ALS-1129/4 NC**

DN125	600 - 1500 r/min	Ø200	3~400 V

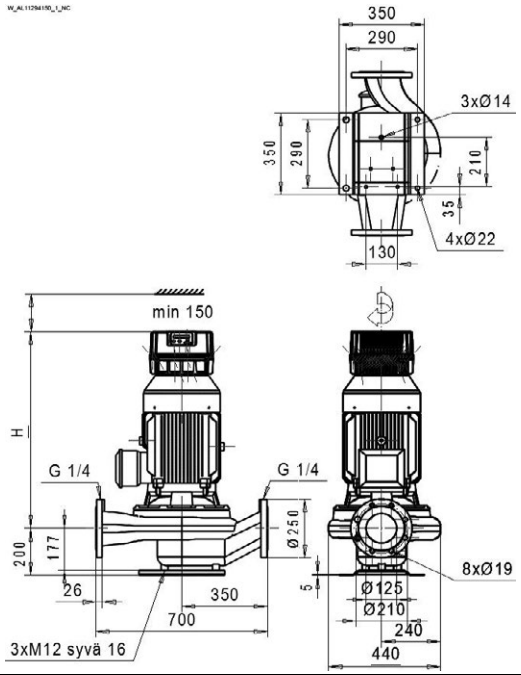

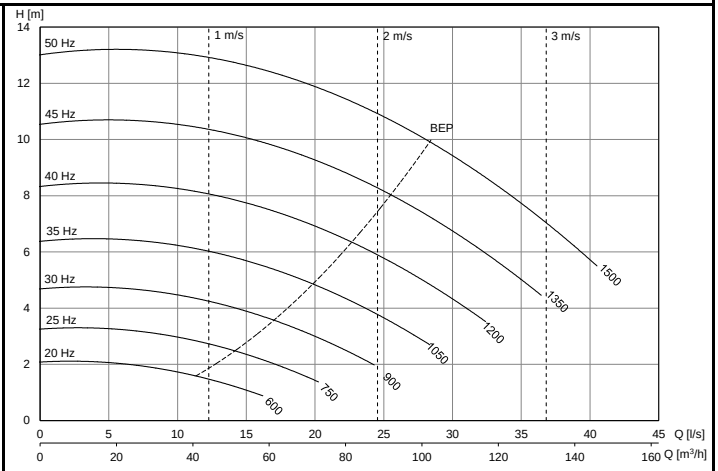

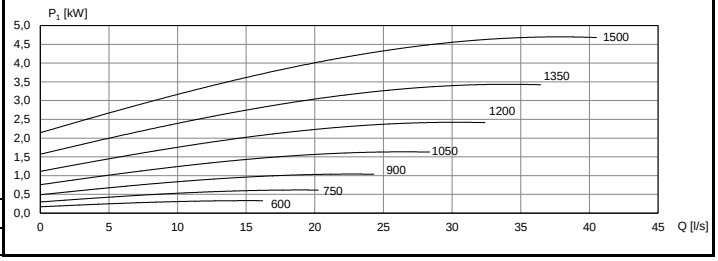

Motor	P_{2N} [kW]	$I_{In,Max}$ [A] (3x400V)	[kg]	H [mm]
KH-132 C2 F31	4	13,5	170	730

AL-1129/4 NC | **ALH-1129/4 NC** | **ALS-1129/4 NC**

DN125	600 - 1500 r/min	Ø222	3~400 V

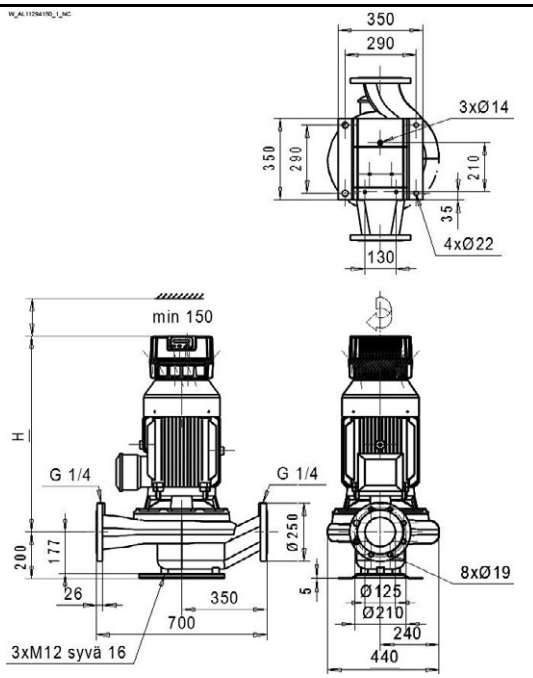

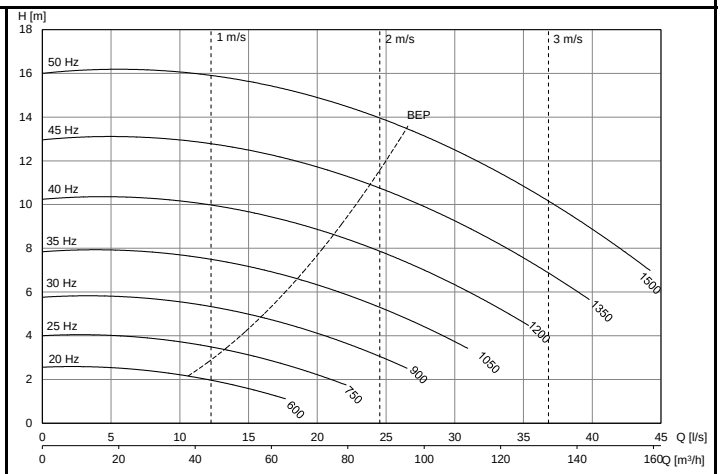

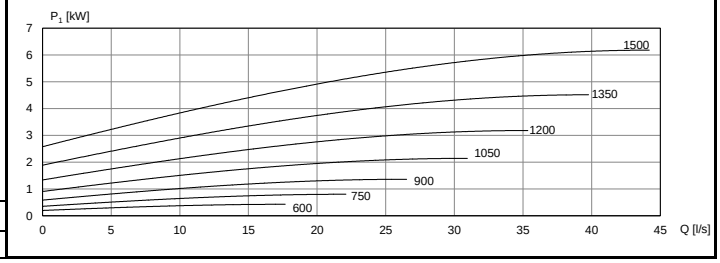

Motor	P_{2N} [kW]	$I_{In,Max}$ [A] (3x400V)	[kg]	H [mm]
KH-132 E2 F31	5,5	16,0	180	730

AL-1129/4 NC | **ALH-1129/4 NC** | **ALS-1129/4 NC**

DN125	600 - 1500 r/min	Ø242	3~400 V

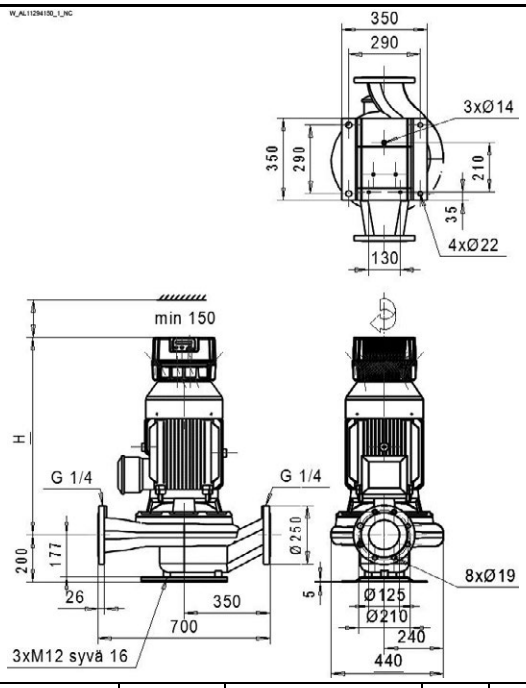

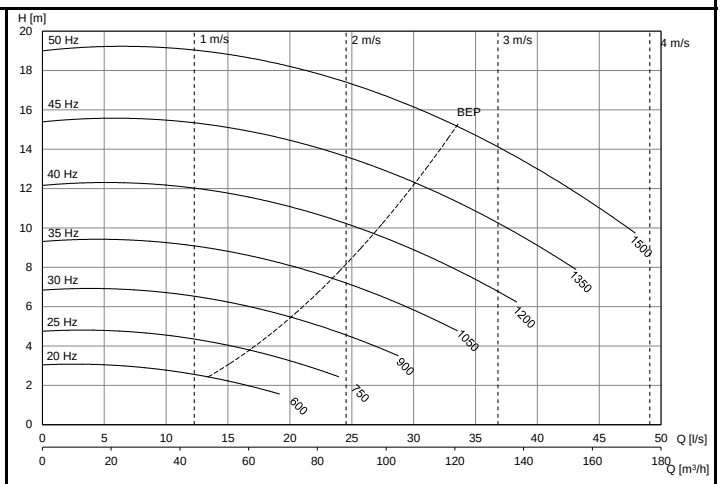

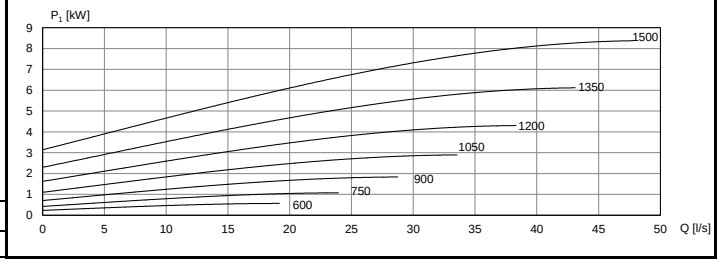

Motor	P_{2N} [kW]	$I_{In,Max}$ [A] (3x400V)	[kg]	H [mm]
KP-134 H2 F31	7,5	21,0	217	730

AL-1129/4 NC | **ALH-1129/4 NC** | **ALS-1129/4 NC**

DN125	600 - 1500 r/min	Ø270	3~ 400 V

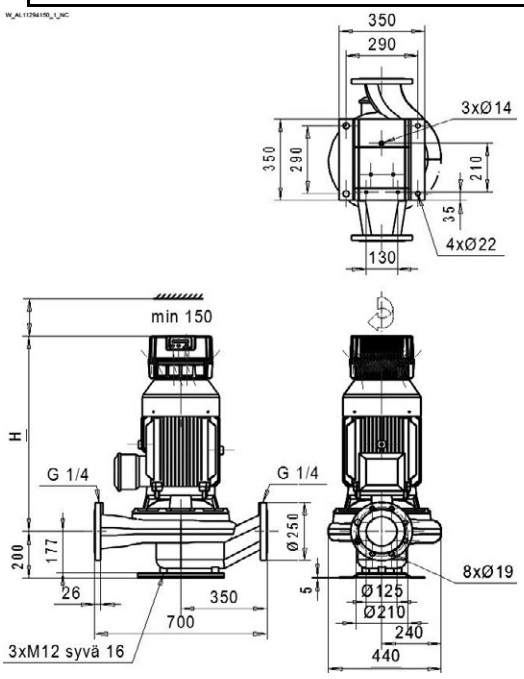

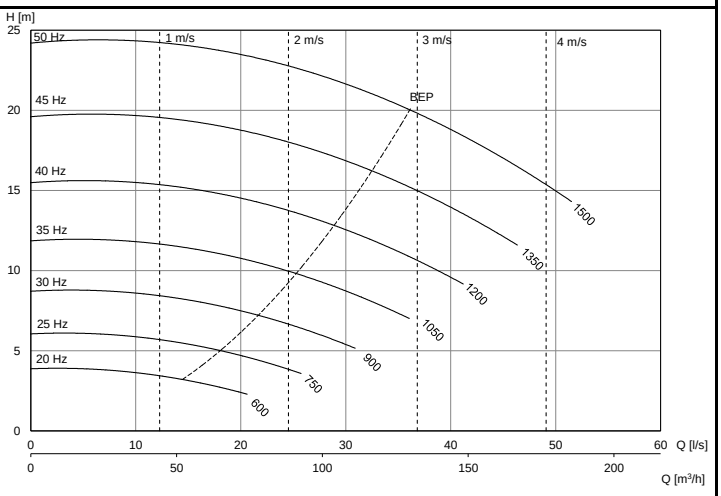

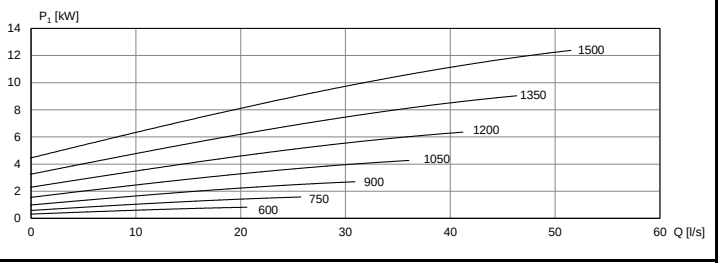

Motor	P_{2N} [kW]	$I_{In,Max}$ [A] (3x400V)	[kg]	H [mm]
KP-166 G2 F31	11	31,0	278	870

AL-1129/4 NC | **ALH-1129/4 NC** | **ALS-1129/4 NC**

DN125	600 - 1500 r/min	Ø288	3~400 V

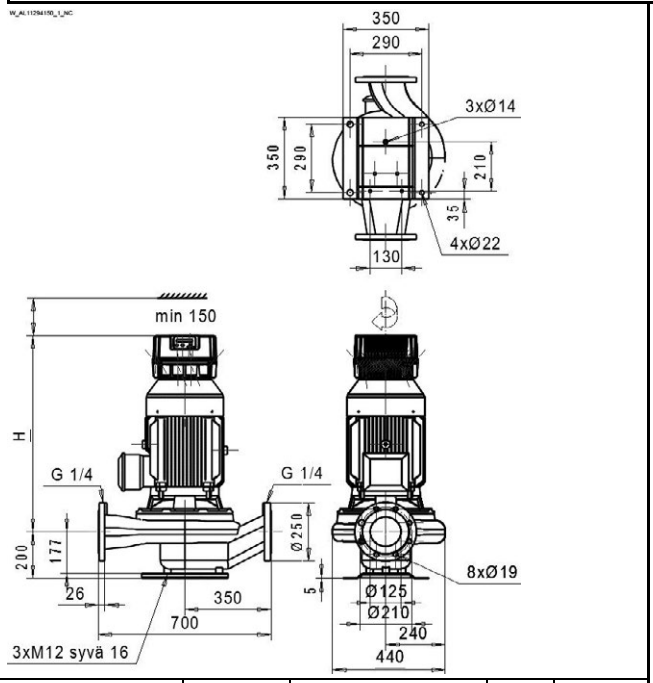

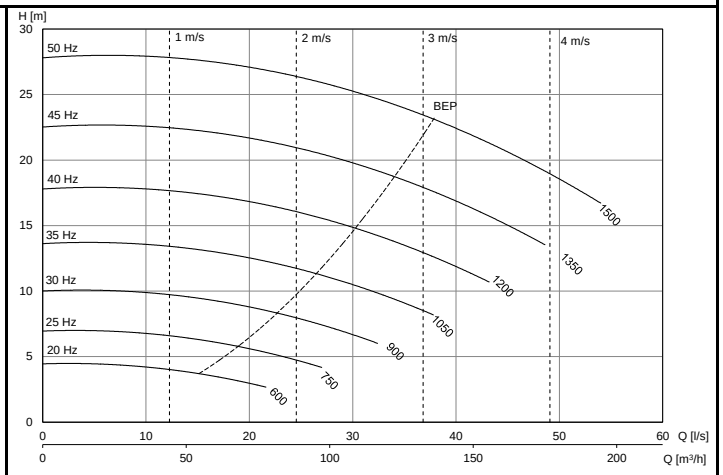

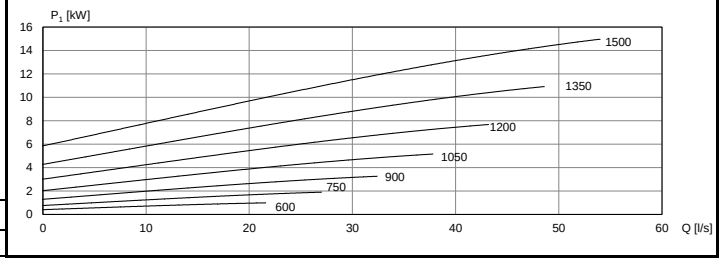

Motor	P_{2N} [kW]	$I_{In,Max}$ [A] (3x400V)	[kg]	H [mm]
KP-166 G2 F31	15	35,0	280	870

AL-1154/4 NC | **ALH-1154/4 NC**

DN150	600 - 1500 r/min	Ø222	3~400 V

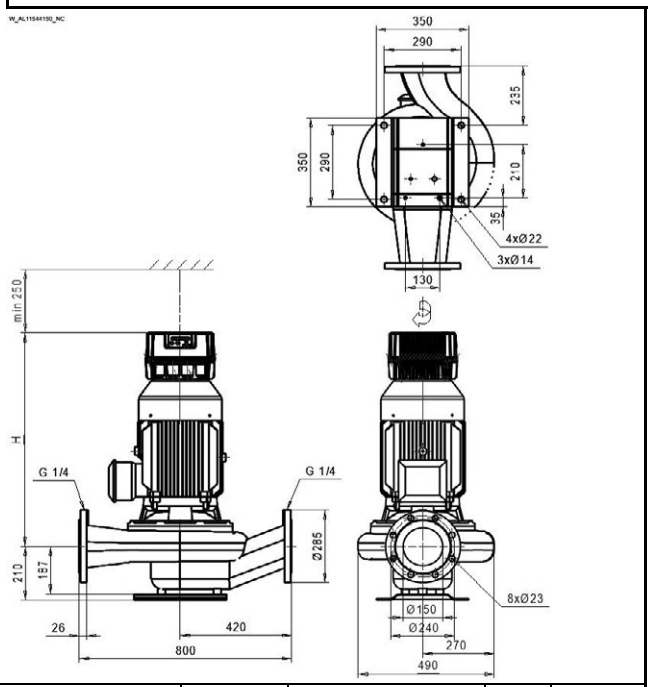

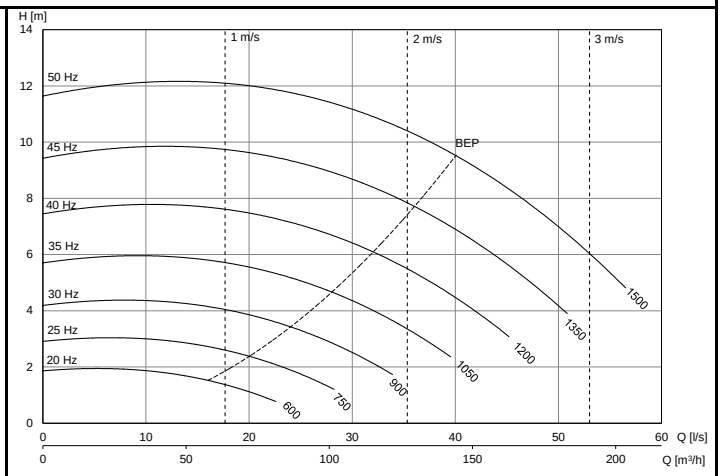

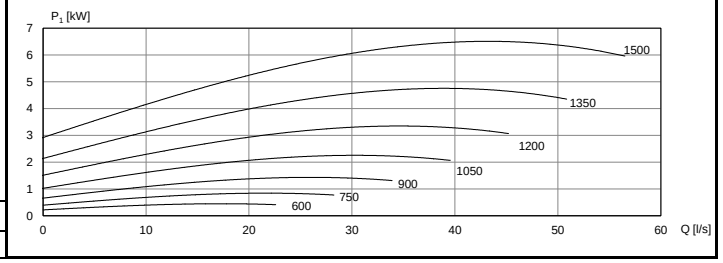

Motor	P_{2N} [kW]	$I_{In,Max}$ [A] (3x400V)	[kg]	H [mm]
KH-132 E2 F31	5,5	16,0	193	680

AL-1154/4 NC **ALH-1154/4 NC**

DN150	600 - 1500 r/min	Ø240	3~400 V

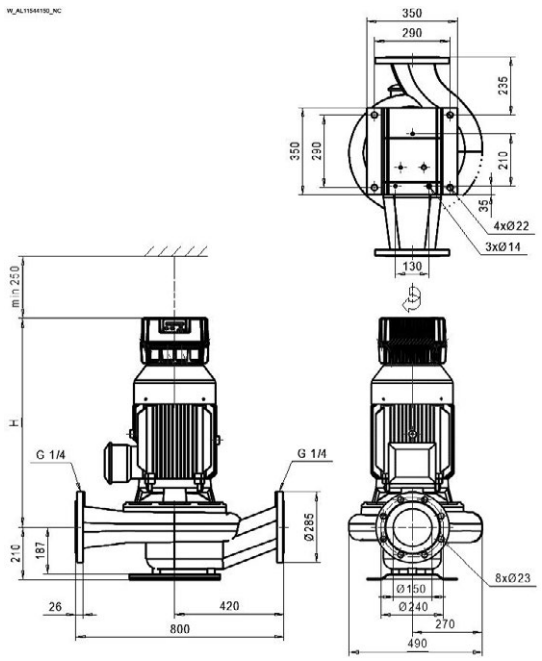

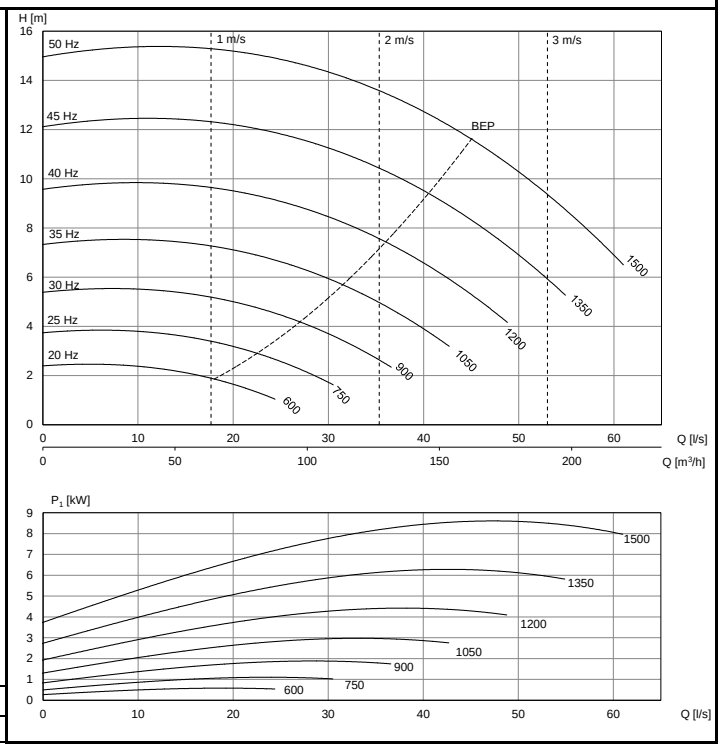

Motor	P_{2N} [kW]	$I_{In,Max}$ [A] (3x400V)	[kg]	H [mm]
KP-134 H2 F31	7,5	21,0	230	730

AL-1154/4 NC **ALH-1154/4 NC**

DN150	600 - 1500 r/min	Ø262	3~400 V

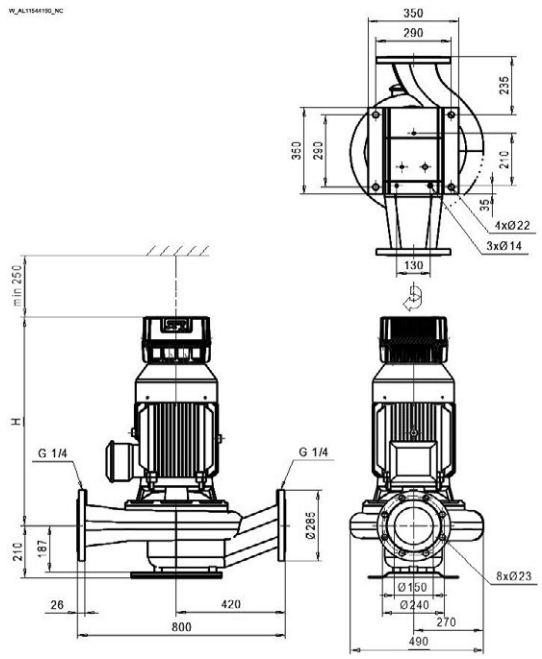

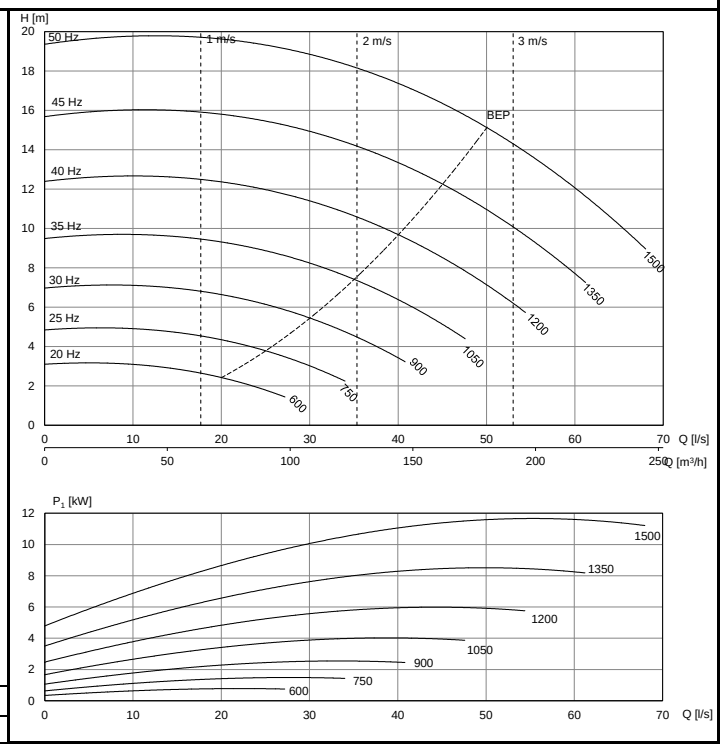

Motor	P_{2N} [kW]	$I_{In,Max}$ [A] (3x400V)	[kg]	H [mm]
KP-166 G2 F31	11	31,0	288	870

AL-1154/4 NC | **ALH-1154/4 NC**

DN150	600 - 1500 r/min	Ø284	3~400 V

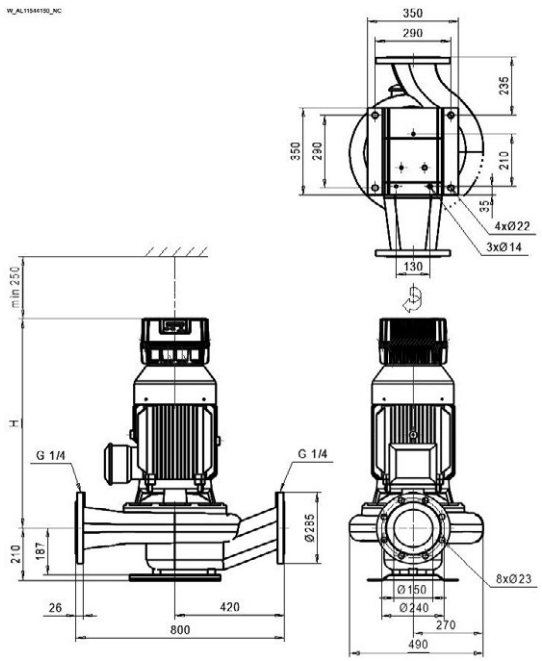

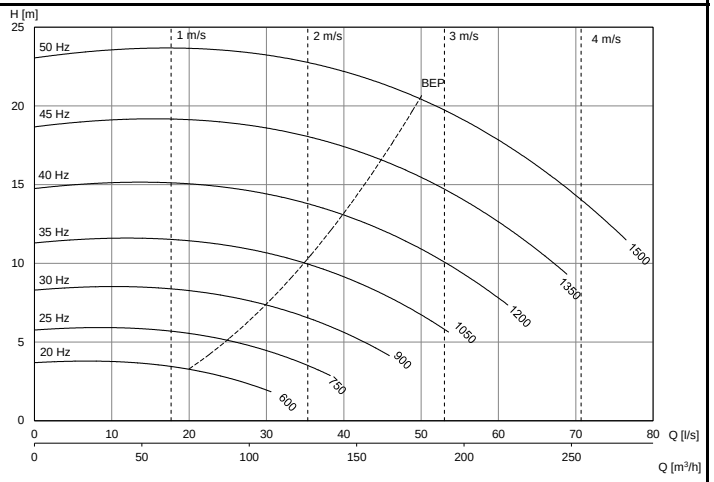

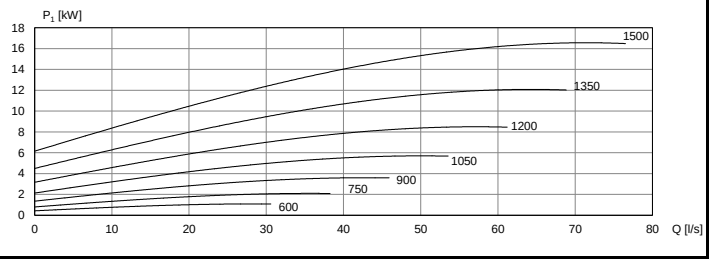

Motor	P_{2N} [kW]	$I_{In,Max}$ [A] (3x400V)	[kg]	H [mm]
KP-166 G2 F31	15	35,0	290	870

AL-1202/6 SD NC | **ALH-1202/6 SD NC** | **ALP-1202/6 SD NC** | **ALS-1202/6 SD NC**

DN200	400 - 1000 r/min	Ø260	3~400 V

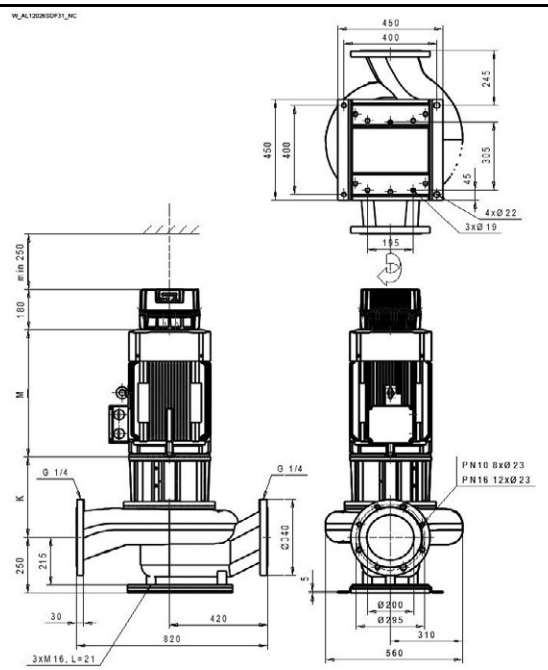

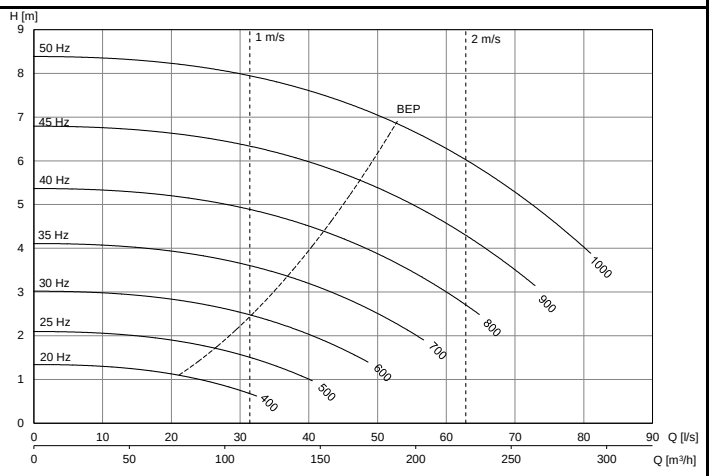

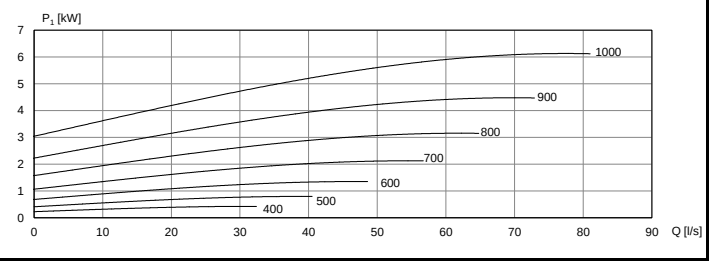

Motor	P_{2N} [kW]	$I_{In,Max}$ [A] (3x400V)	[kg]	M [mm]	K [mm]
IEC-132	5,5	16,0	310	670	311

AL-1202/6 SD NC **ALH-1202/6 SD NC** **ALP-1202/6 SD NC** **ALS-1202/6 SD NC**

DN200	400 - 1000 r/min	Ø282	3~400 V

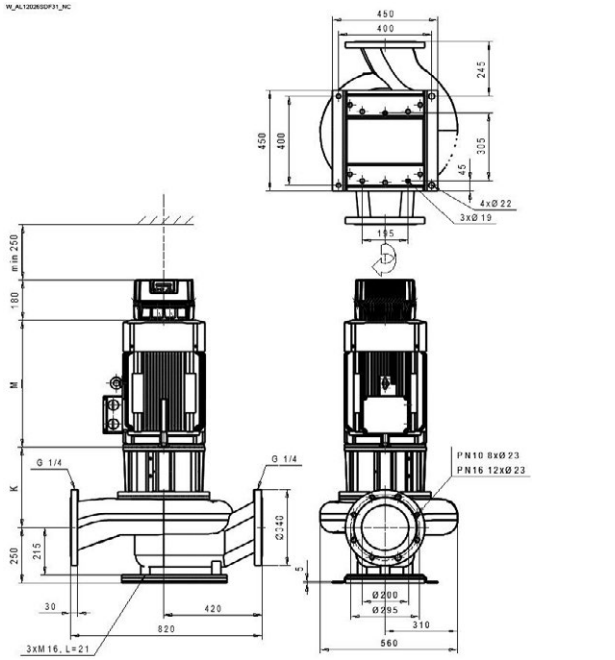

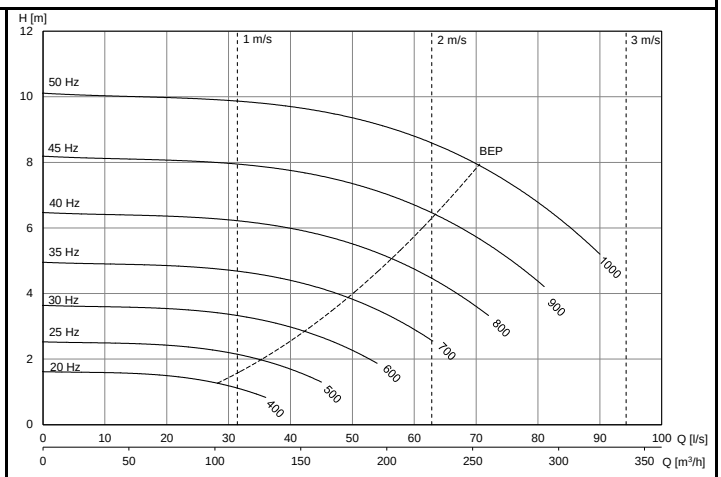

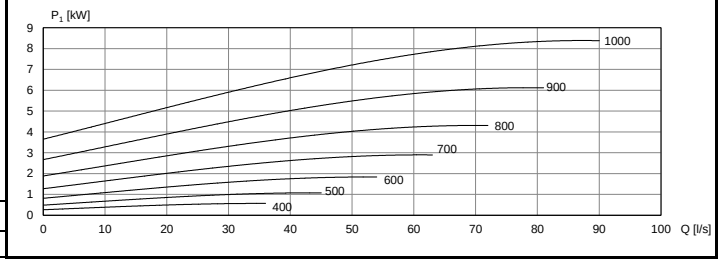

Motor	P_{2N} [kW]	$I_{In,Max}$ [A] (3x400V)	[kg]	M [mm]	K [mm]
IEC-160	7,5	21,0	340	760	359

AL-1202/6 SD NC **ALH-1202/6 SD NC** **ALP-1202/6 SD NC** **ALS-1202/6 SD NC**

DN200	400 - 1000 r/min	Ø315	3~400 V

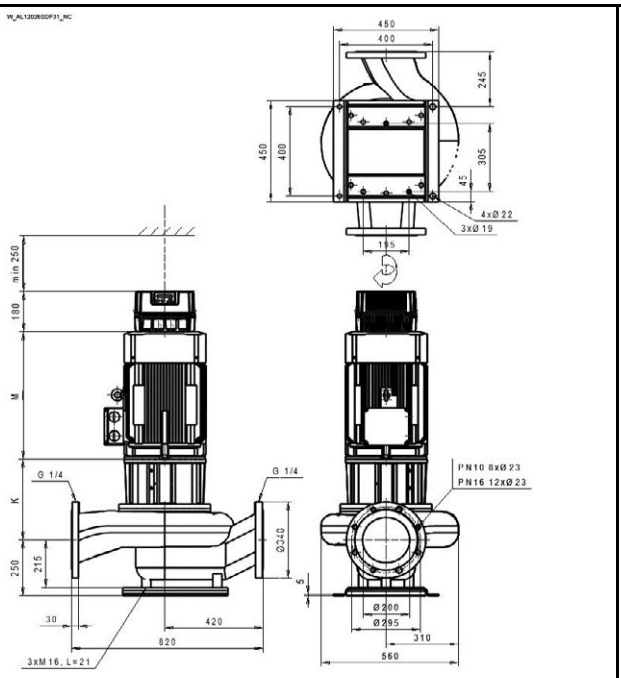

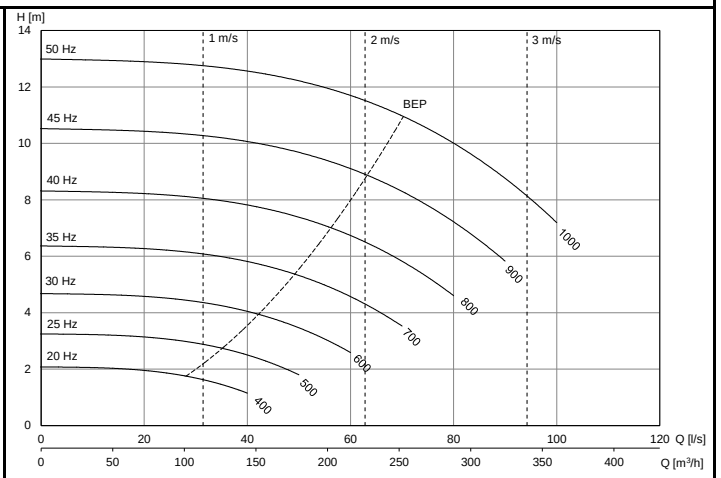

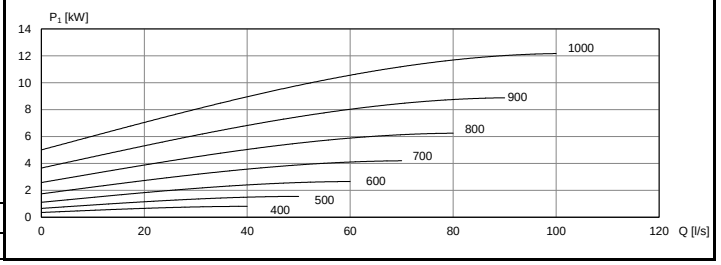

Motor	P_{2N} [kW]	$I_{In,Max}$ [A] (3x400V)	[kg]	M [mm]	K [mm]
IEC-160	11	31,0	350	760	359

AL-1202/4 NC | **ALH-1202/4 NC** | **ALP-1202/4 NC** | **ALS-1202/4 NC**

DN200	600 - 1500 r/min	Ø242	3~400 V

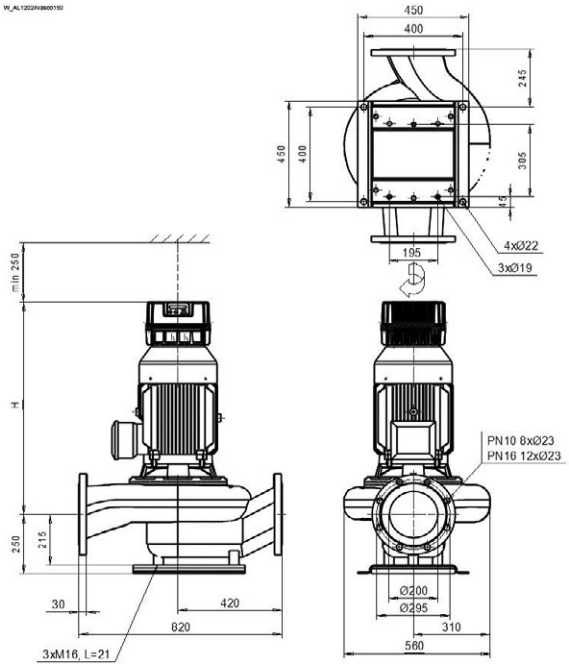

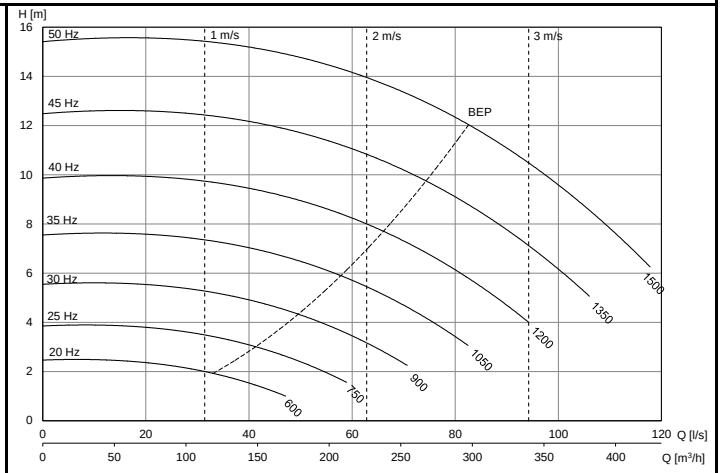

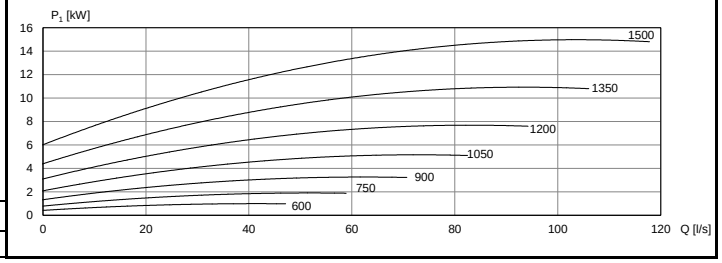

Motor	P_{2N} [kW]	$I_{In,Max}$ [A] (3x400V)	[kg]	H [mm]
KP-166 G2 F31	15	35,0	342	930

Kolmeks Oy

Taimistotie 2
14200 Turenki
FINLAND

Tel. +358 20 7521 31

sales.finland@kolmeks.com

www.kolmeks.com